Dish Roundabout
SWD100

Dwn PM Scale 1:100@A4 05.06.20 Rev 01

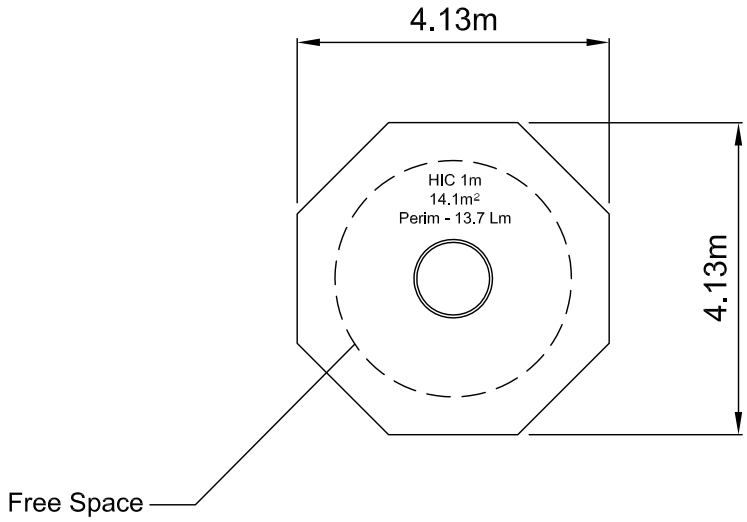

SAFETY SURFACING
AREA 14.1m²
PERIMETER 13.7m
HIC 1m

PRODUCT SPECIFICS
Age Range 3 - 10 years

Play Type Physical, social,
locomotor, inclusive

DO NOT SCALE FROM THIS DRAWING
THIS DRAWING MUST NOT BE USED
FOR INSTALLATION PURPOSES.