PRIME

ASENNUSOHJE
MONTERINGSANSVISNING
INSTALLATION INSTRUCTION
AUFBAUANLEITUNG
NOTICE D'INSTALLATION

DATE: 13.11.2025

F24201M

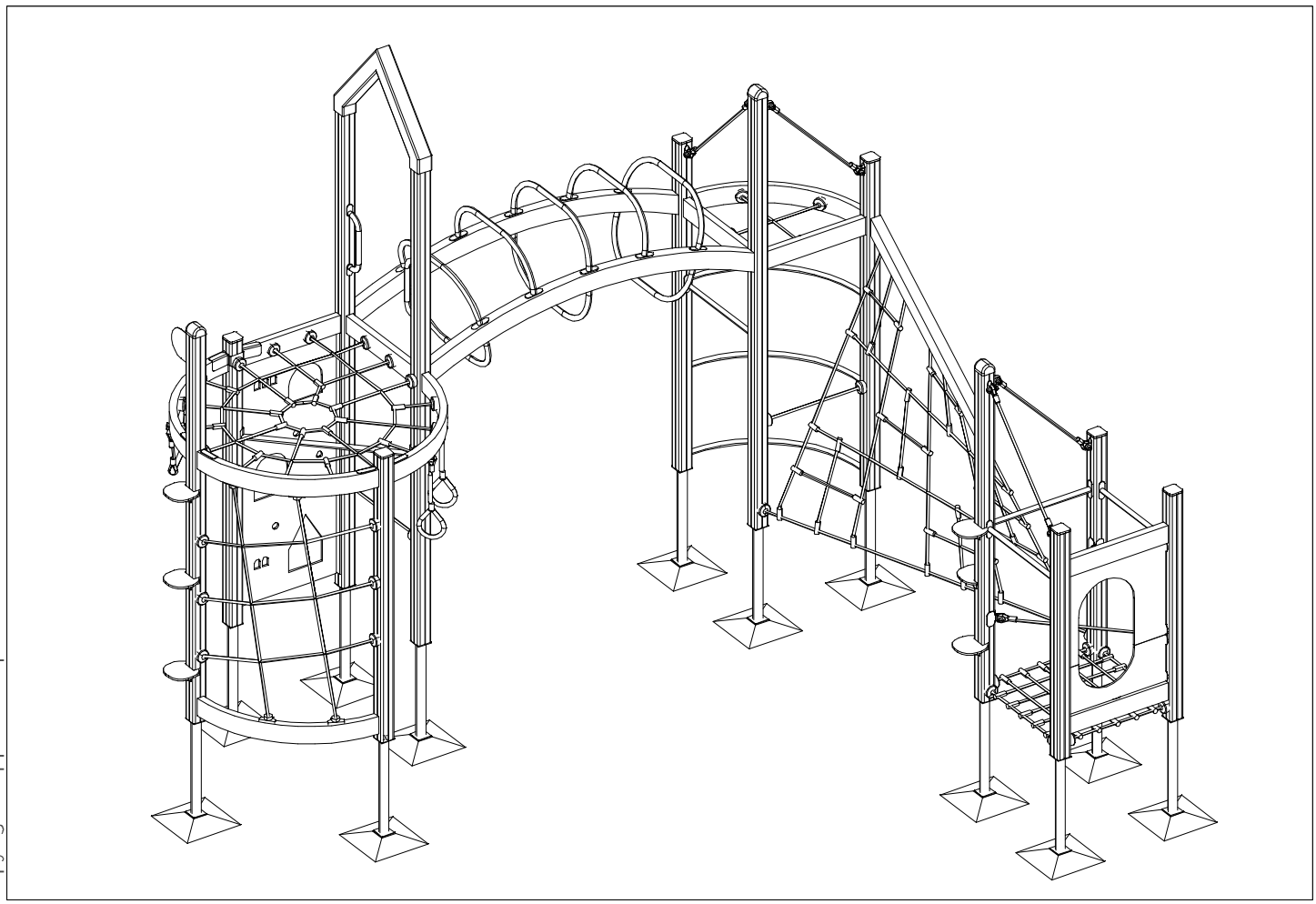

Copyright Lappset Group Ltd

LAPPSET®
PRIME

F24201M

DATE: 13.11.2025

	PCS		PCS		PCS		PCS		PCS		PCS
712007	6	712031	3	712035	2	712038	3	712042	1	712045	1
		L 1550		L 1950		L 2250		L 2650		L 2950	
712048	2	712397	1	712398	1	712539	1	712562	1	712730	2
L 3250											
712747	6	712751	1	712760	7	712780	4	712788	3	712796	1
L 704						L 704					
712797	1	712798	1	712818	1	712819	5	712820	1	712822	1
						L 1096					
712823	1	712824	3	712875	2	712876	8	712889	12	712910	6
				L 2400				L 700			
712926	1	712929	1	712953	4	712962	1	713003	3	713080	2
L 2400											
713087	2	713088	1								

Copyright Lappset Group Ltd

LAPPSET PRIME

F24201M

DATE: 13.11.2025

4

EN/AS Impact Area 49 m2

Falling Space 49 m2

Max Falling Height 2570 mm

Grid size = 1000 mm

1:50

0 2

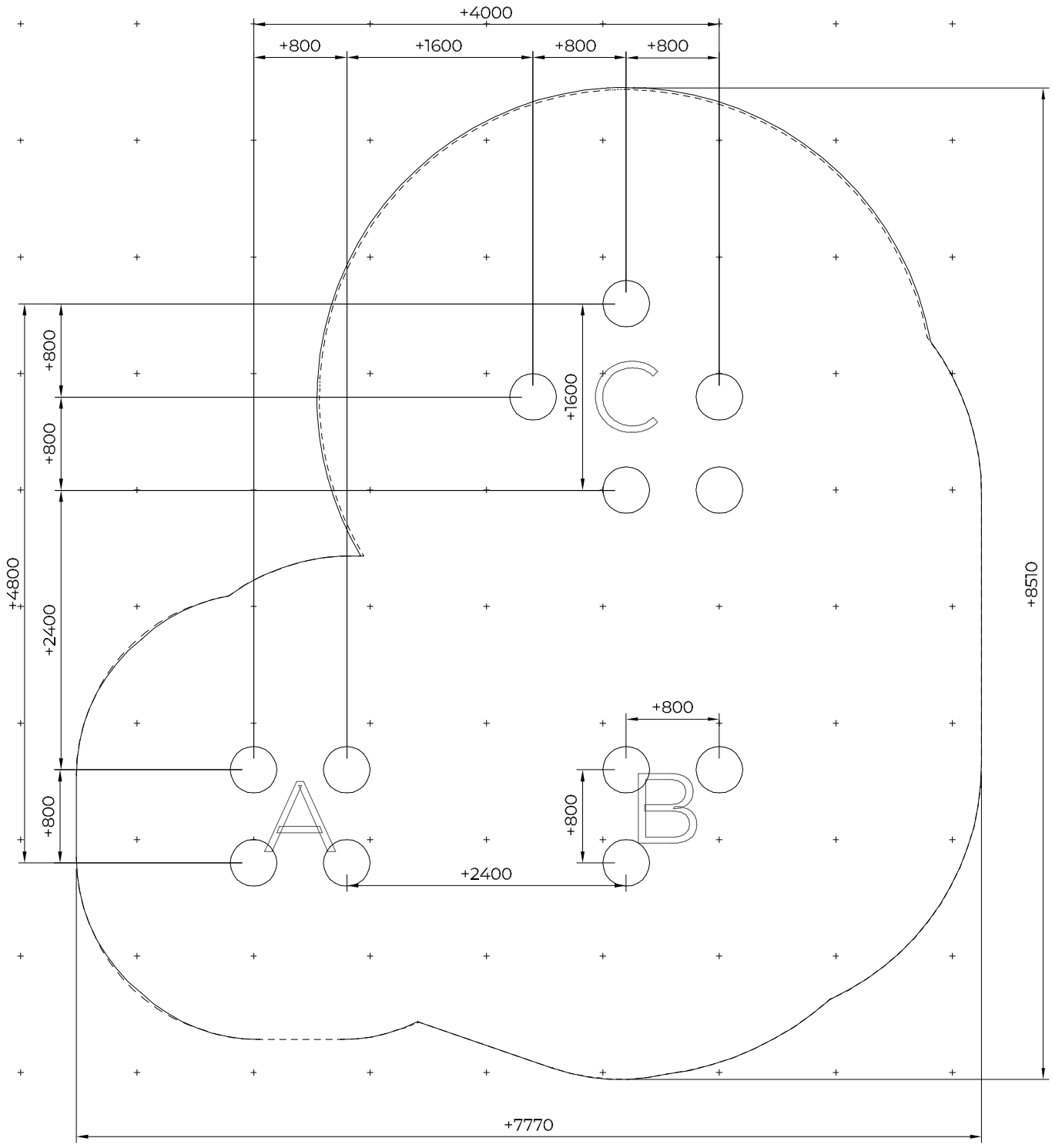

Copyright Lappset Group Ltd

LAPPSET PRIME

F24201M

DATE: 13.11.2025

EN/AS Impact Area 49 m2

Falling Space 49 m2

Max Falling Height 2570 mm

1:50

0 2

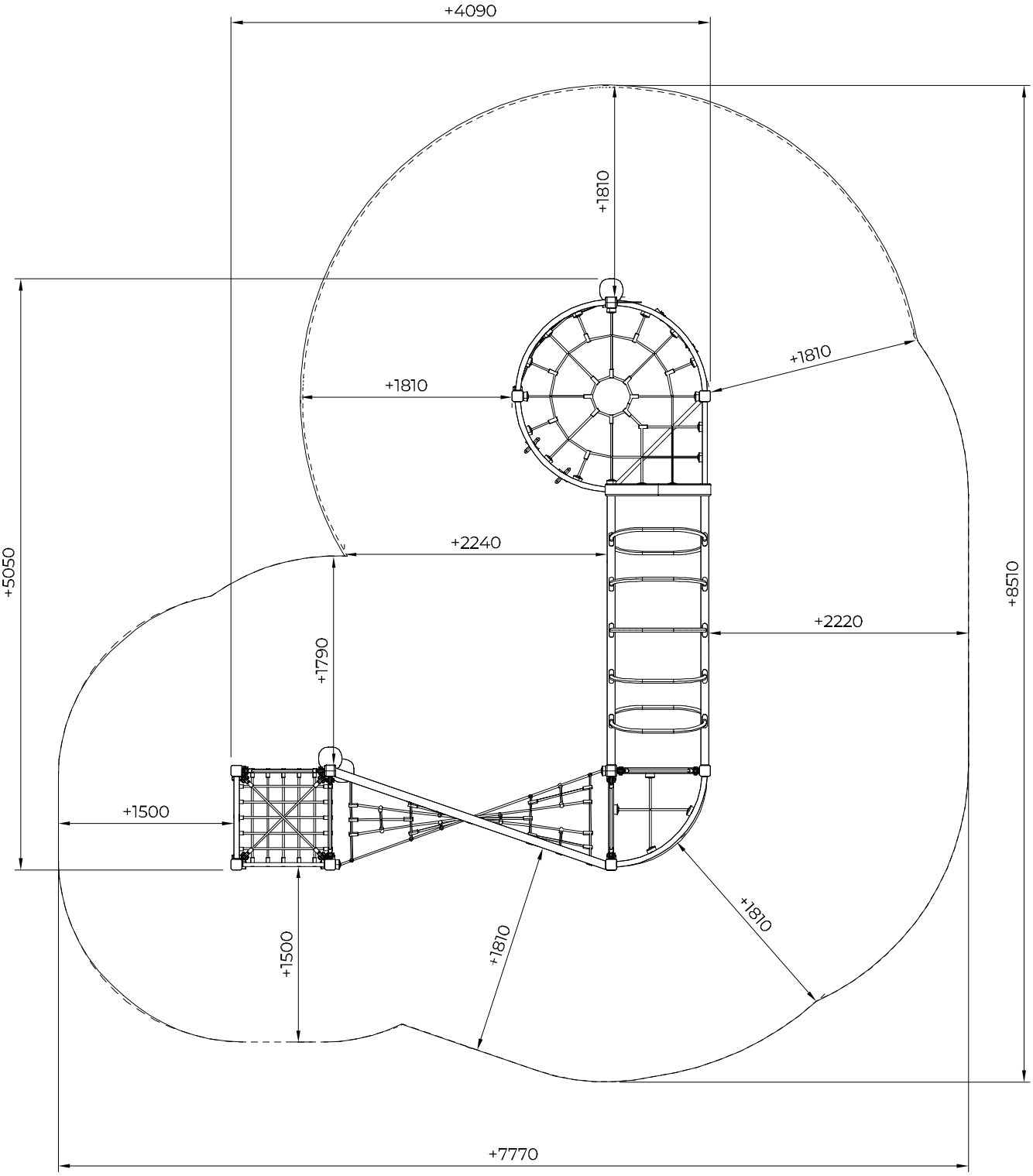

Copyright Lappset Group Ltd

LAPPSET

PRIME

F24201M

DATE: 13.11.2025

5.1

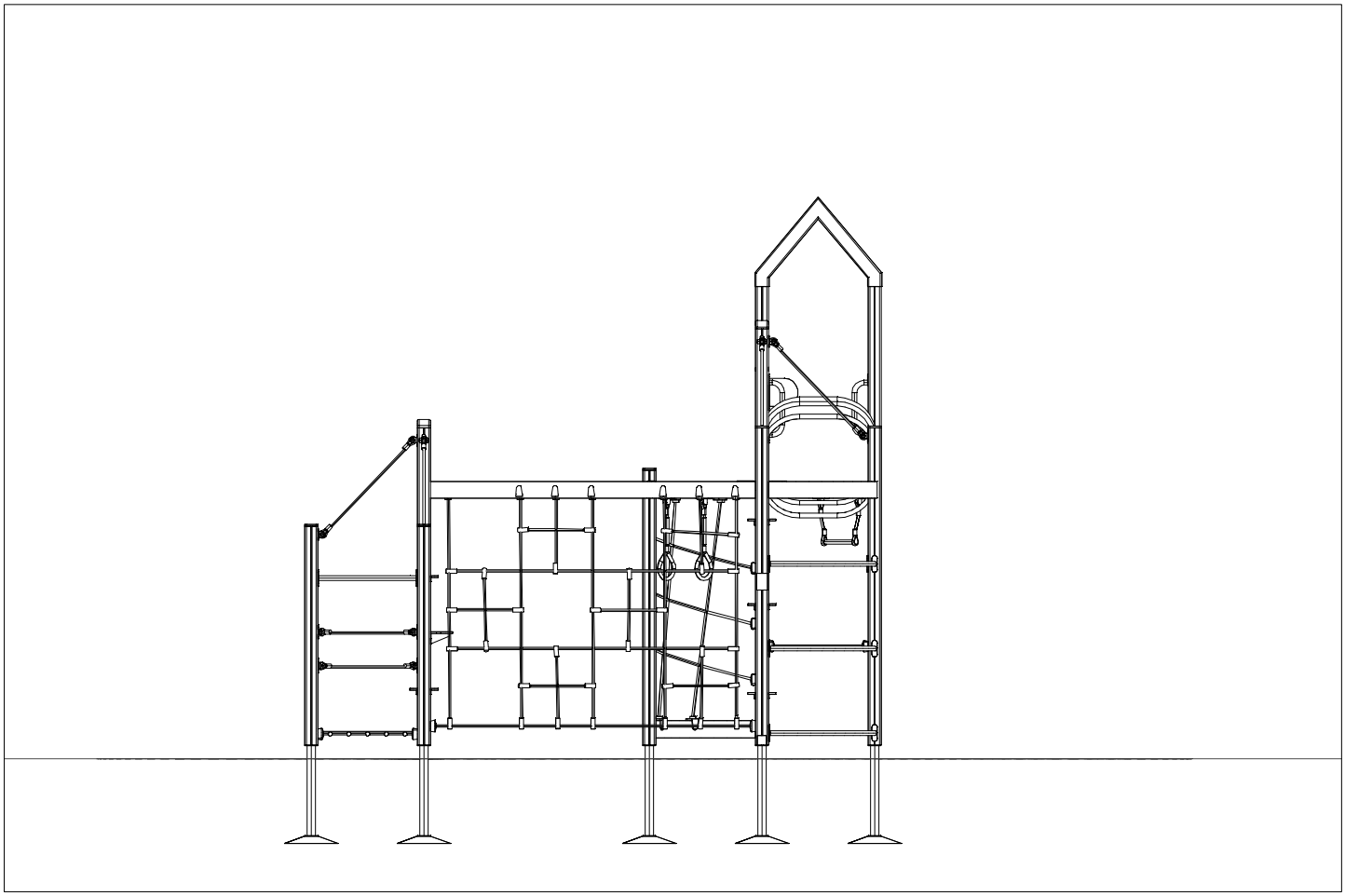

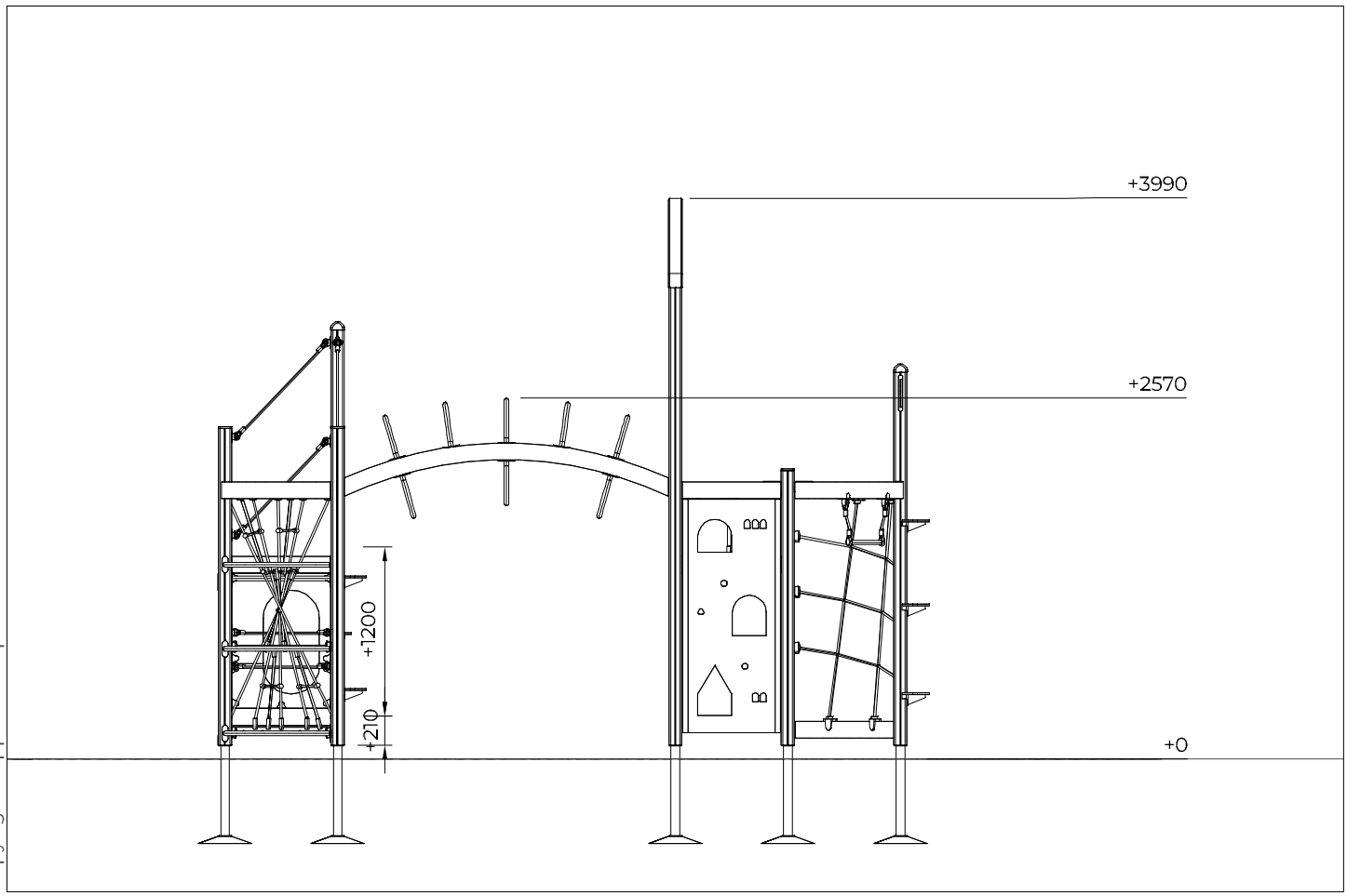

Copyright Lappset Group Ltd

LAPPSET
PRIME

F24201M

DATE: 13.11.2025

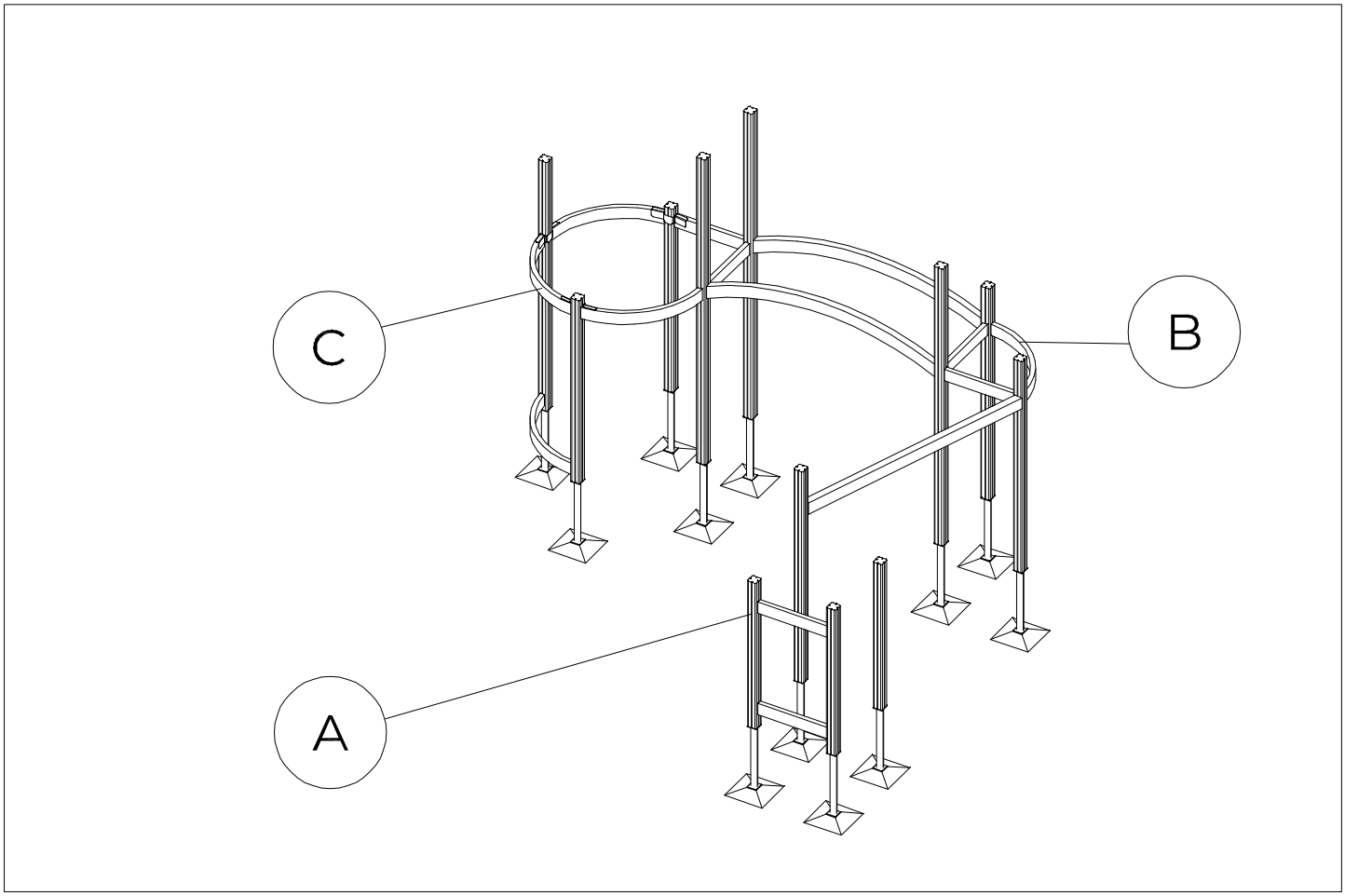

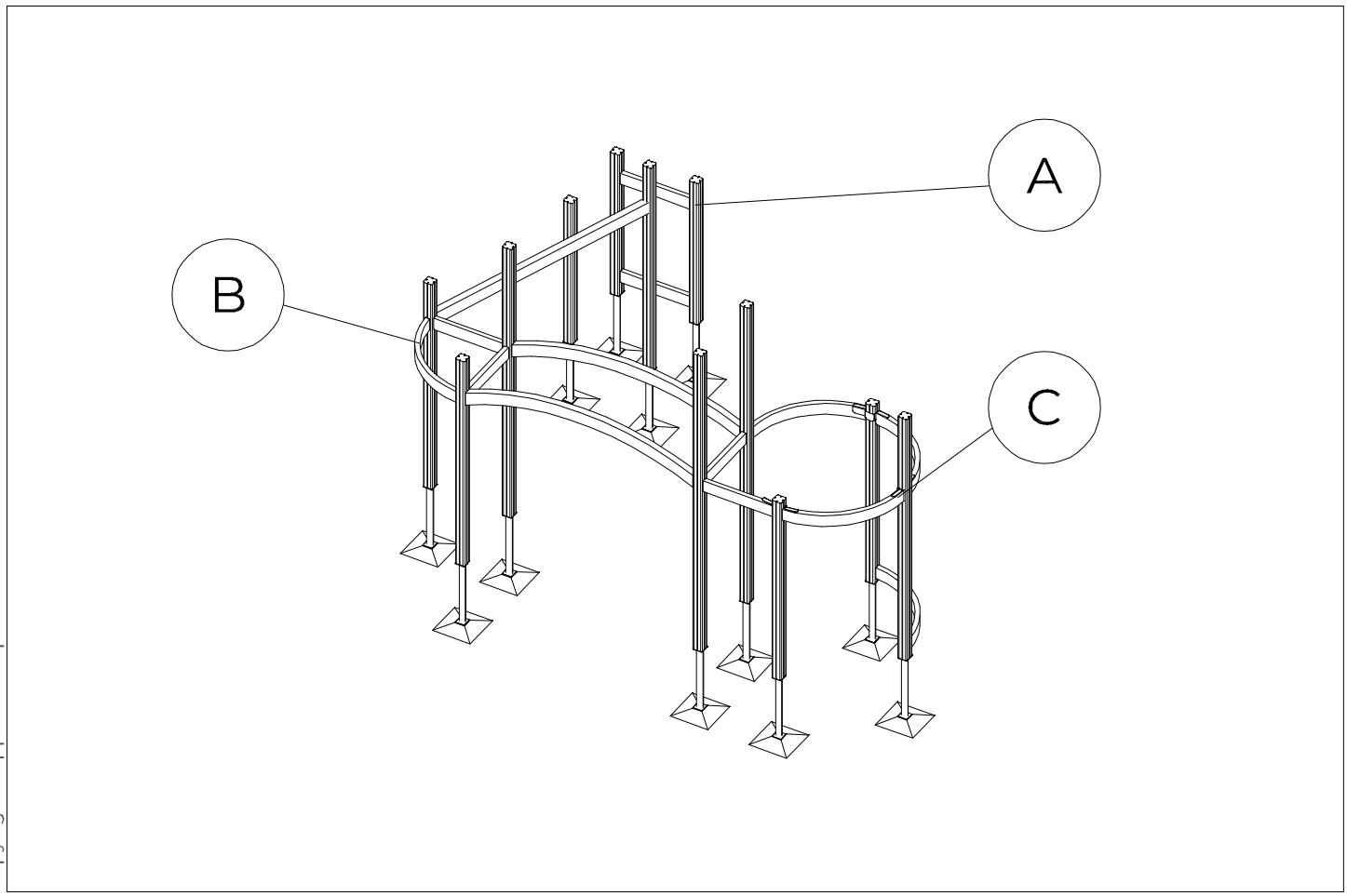

Copyright Lappset Group Ltd

LAPPSET
PRIME

F24201M

DATE: 13.11.2025

TOWER A

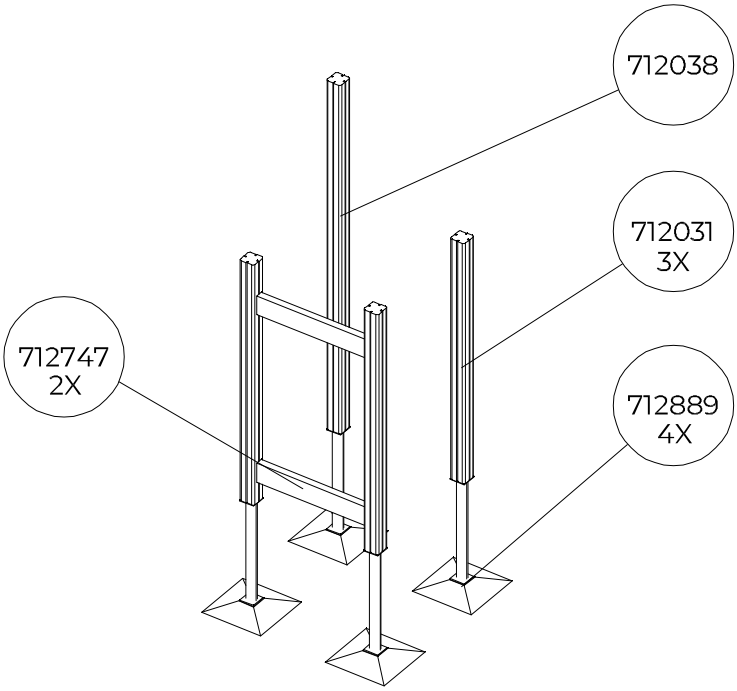

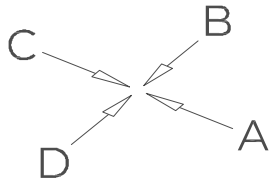

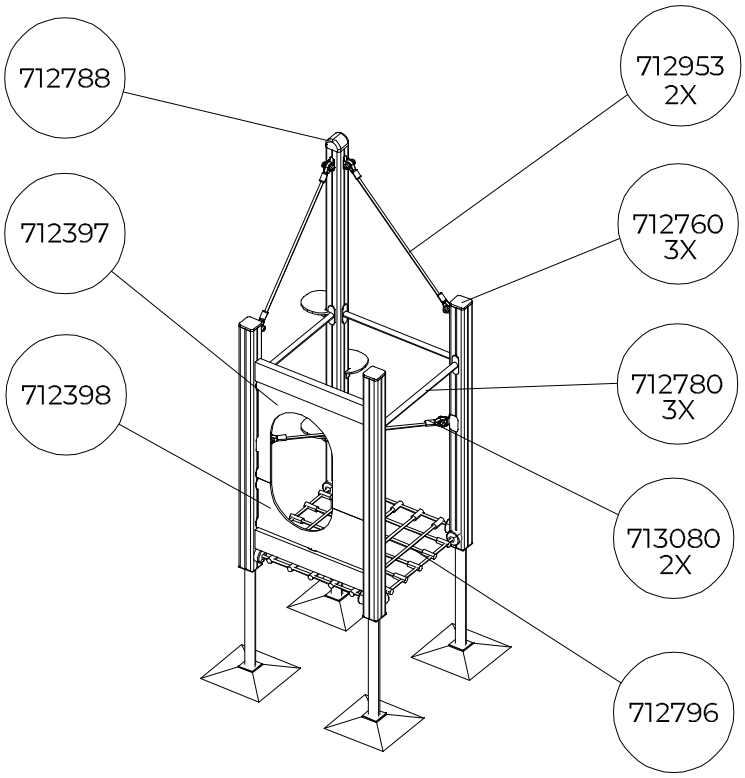

Copyright Lappset Group Ltd

LAPPSET
PRIME

F24201M

DATE: 13.11.2025

TOWER A
7.1

A

1:50

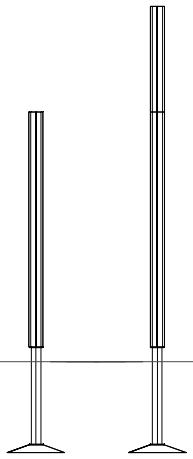

B

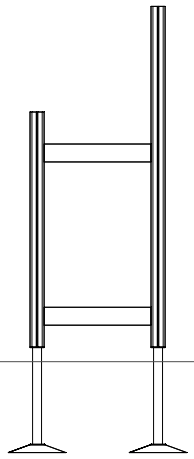

C

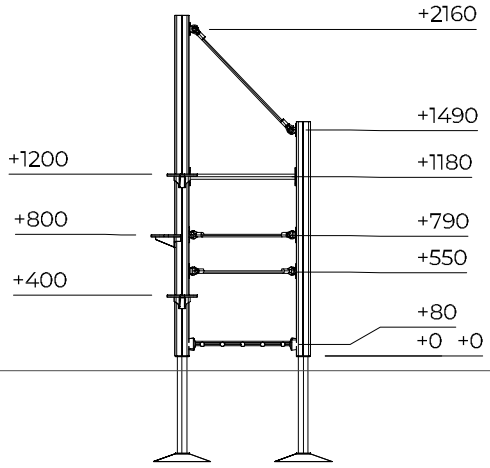

D

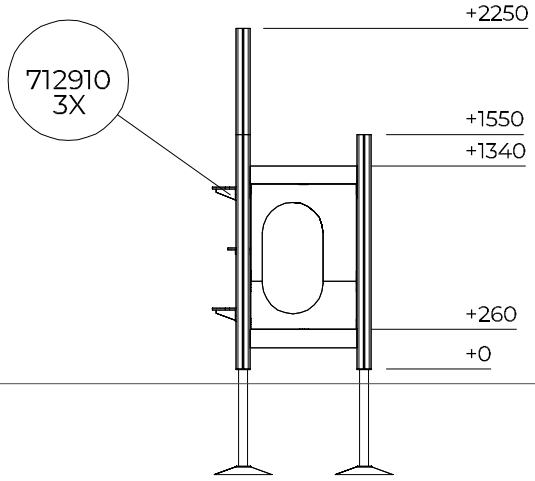

Copyright Lappset Group Ltd

LAPPSET
PRIME

F24201M

DATE: 13.11.2025

TOWER B
7.2

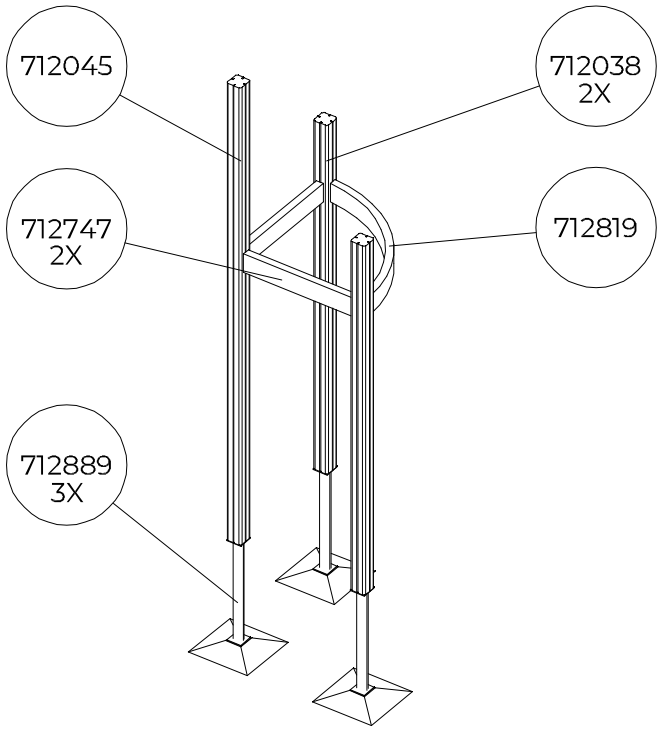

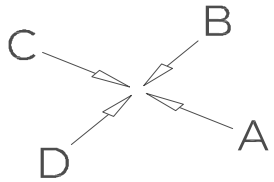

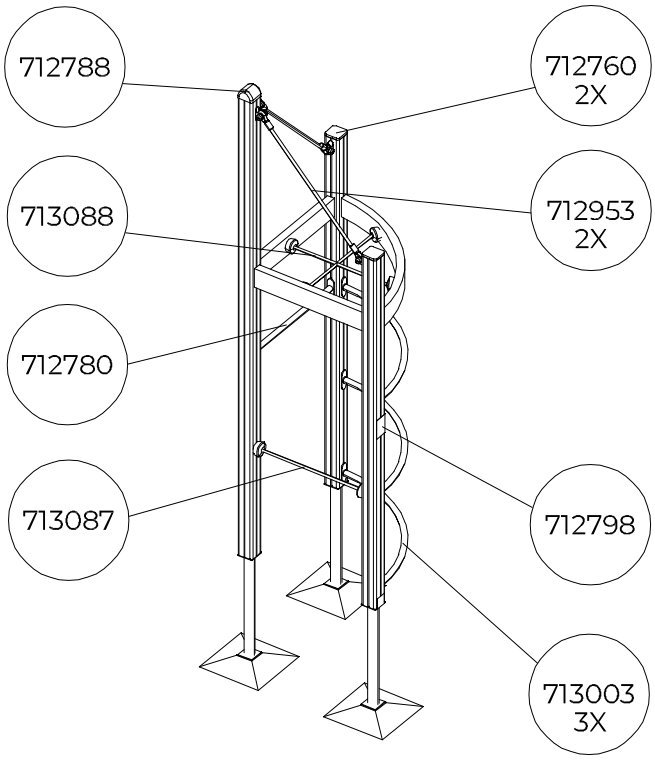

Copyright Lappset Group Ltd

LAPPSET PRIME

F24201M

DATE: 13.11.2025

TOWER B
7.3

A

1:50

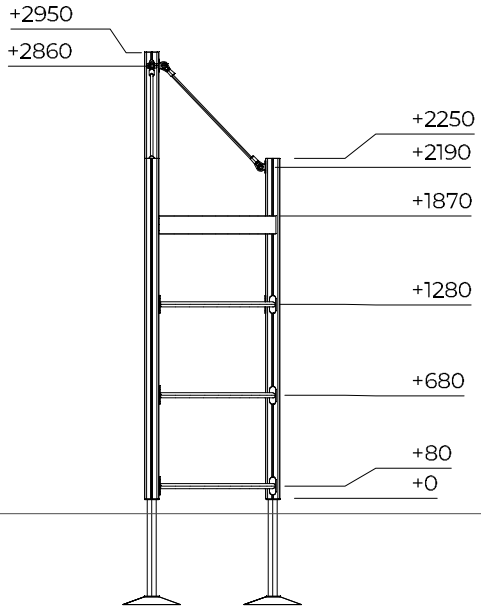

B

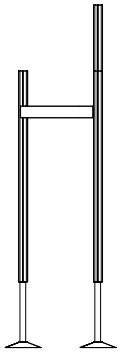

C

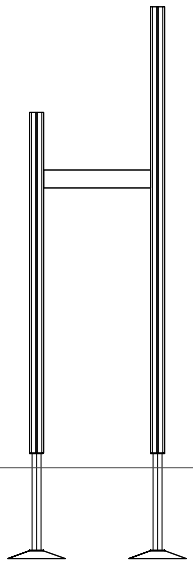

D

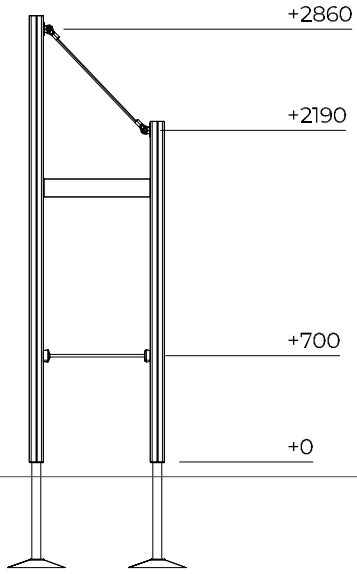

Copyright Lappset Group Ltd

LAPPSET PRIME

F24201M

DATE: 13.11.2025

TOWER C
7.4

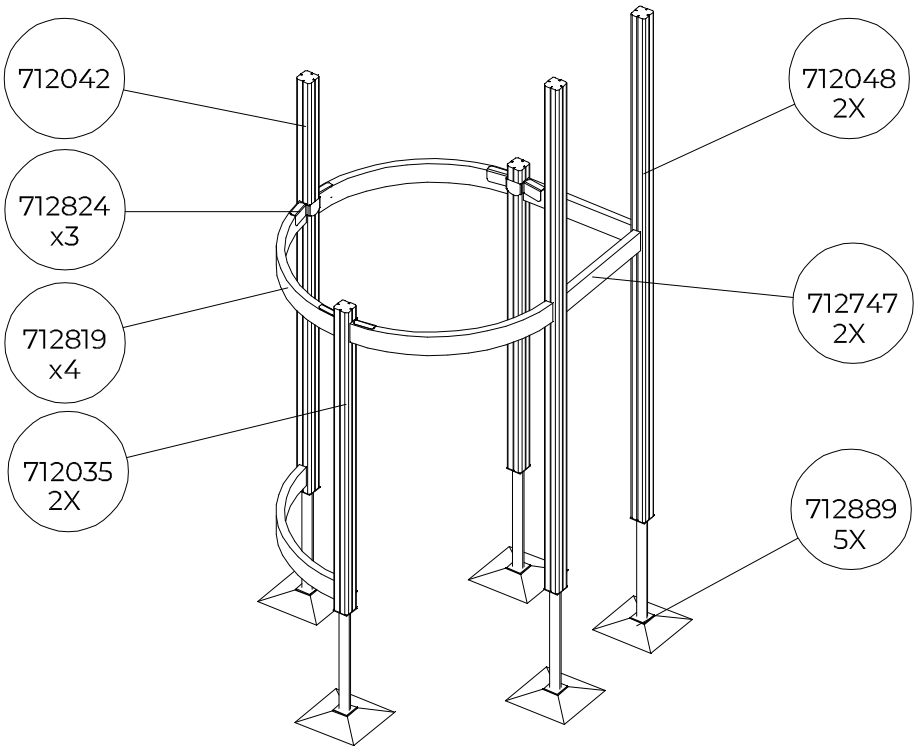

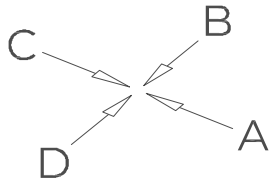

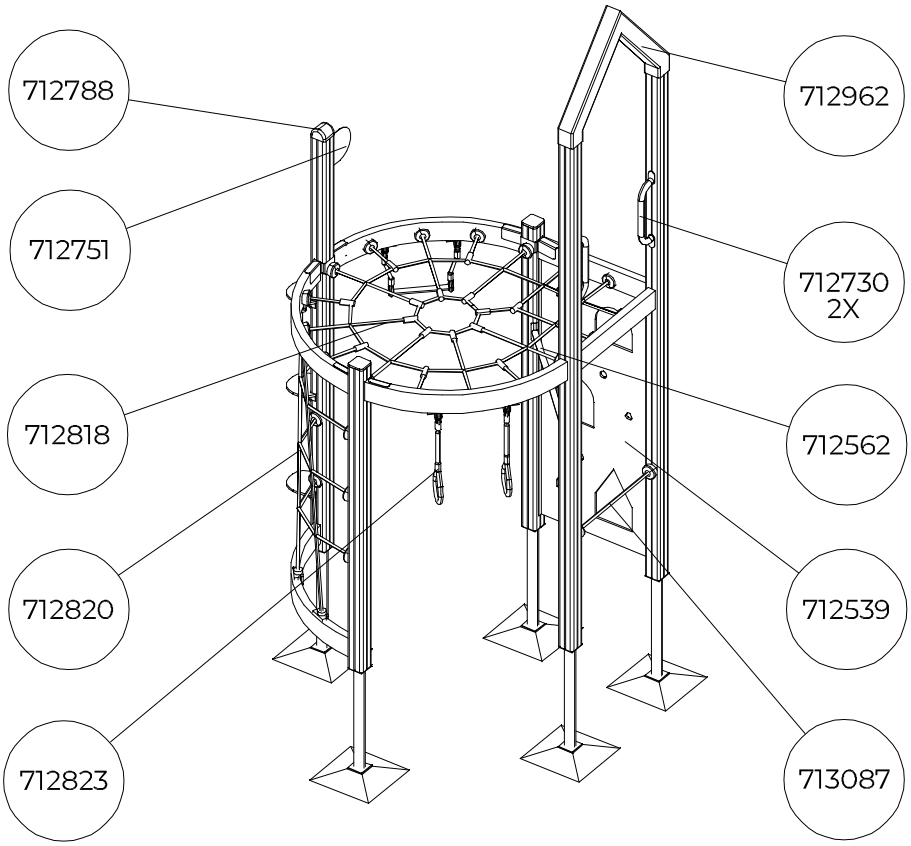

Copyright Lappset Group Ltd

LAPPSET PRIME

F24201M

DATE: 13.11.2025

TOWER C 7.5

A

1:50

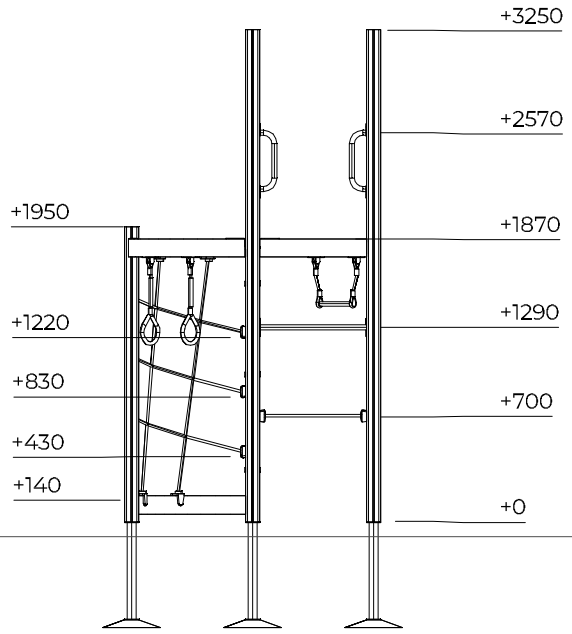

B

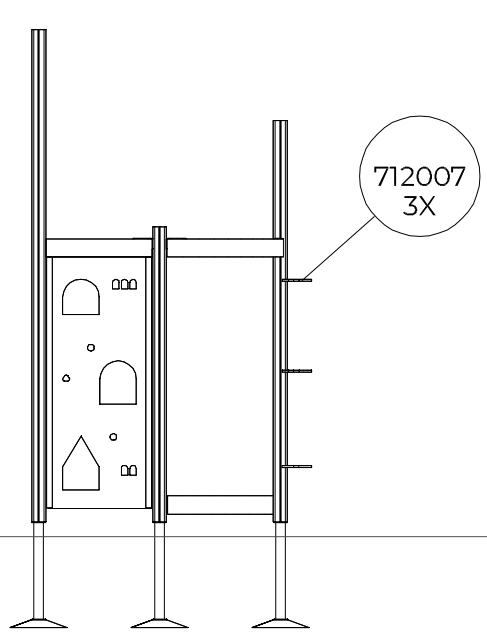

C

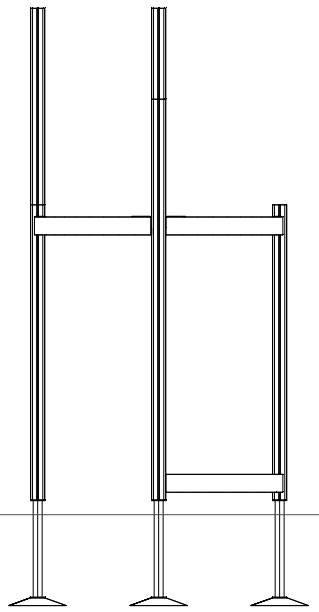

D

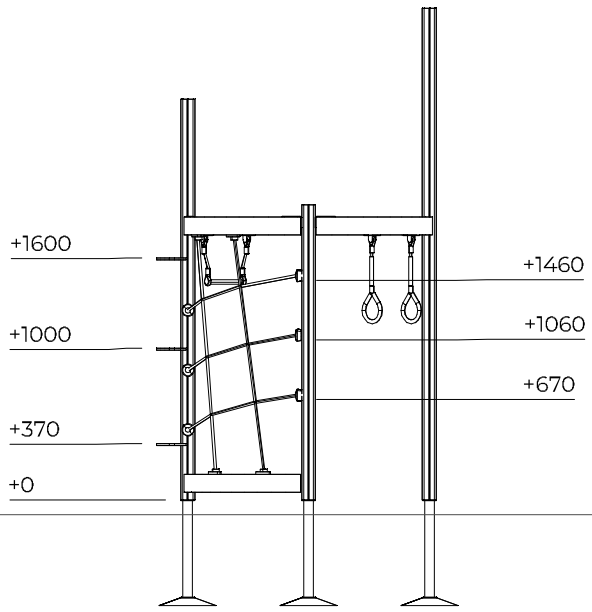

Copyright Lappset Group Ltd

LAPPSET

PRIME

F24201M

DATE: 13.11.2025

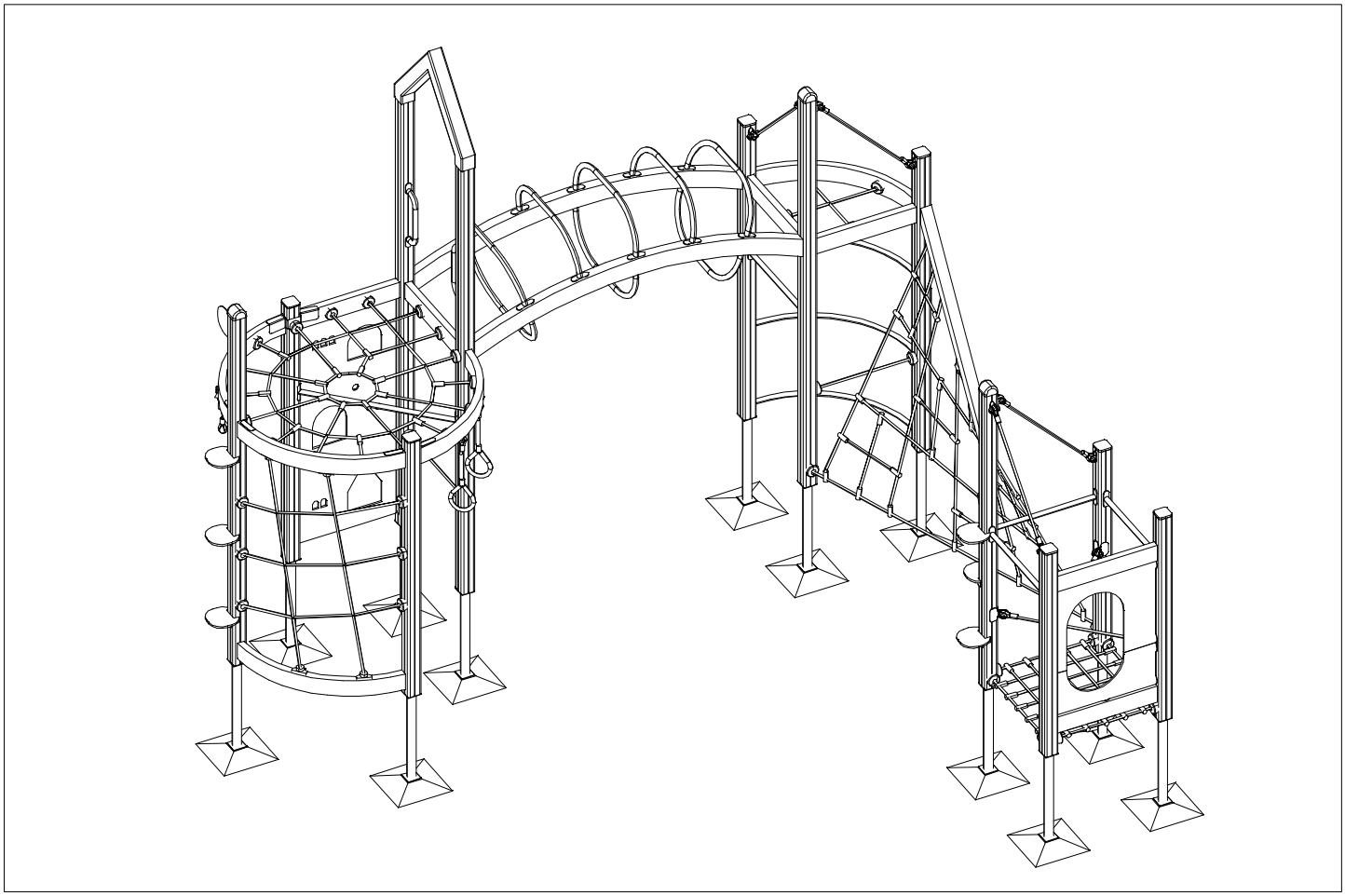

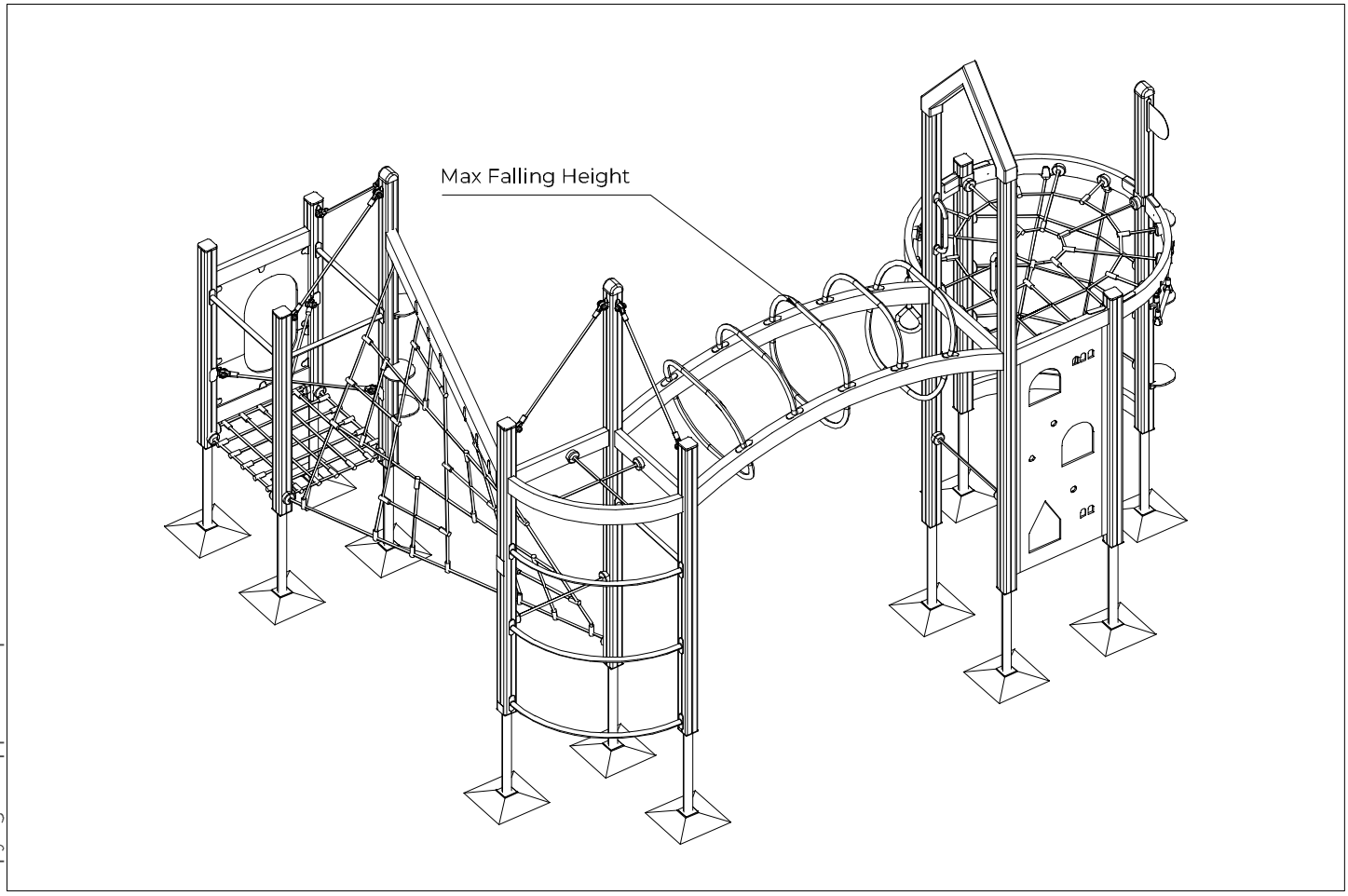

Copyright Lappset Group Ltd

BANANA MONKEY BARS

Doc.Code: 298209
Rev.: 1.1

DATE: 3.11.2025

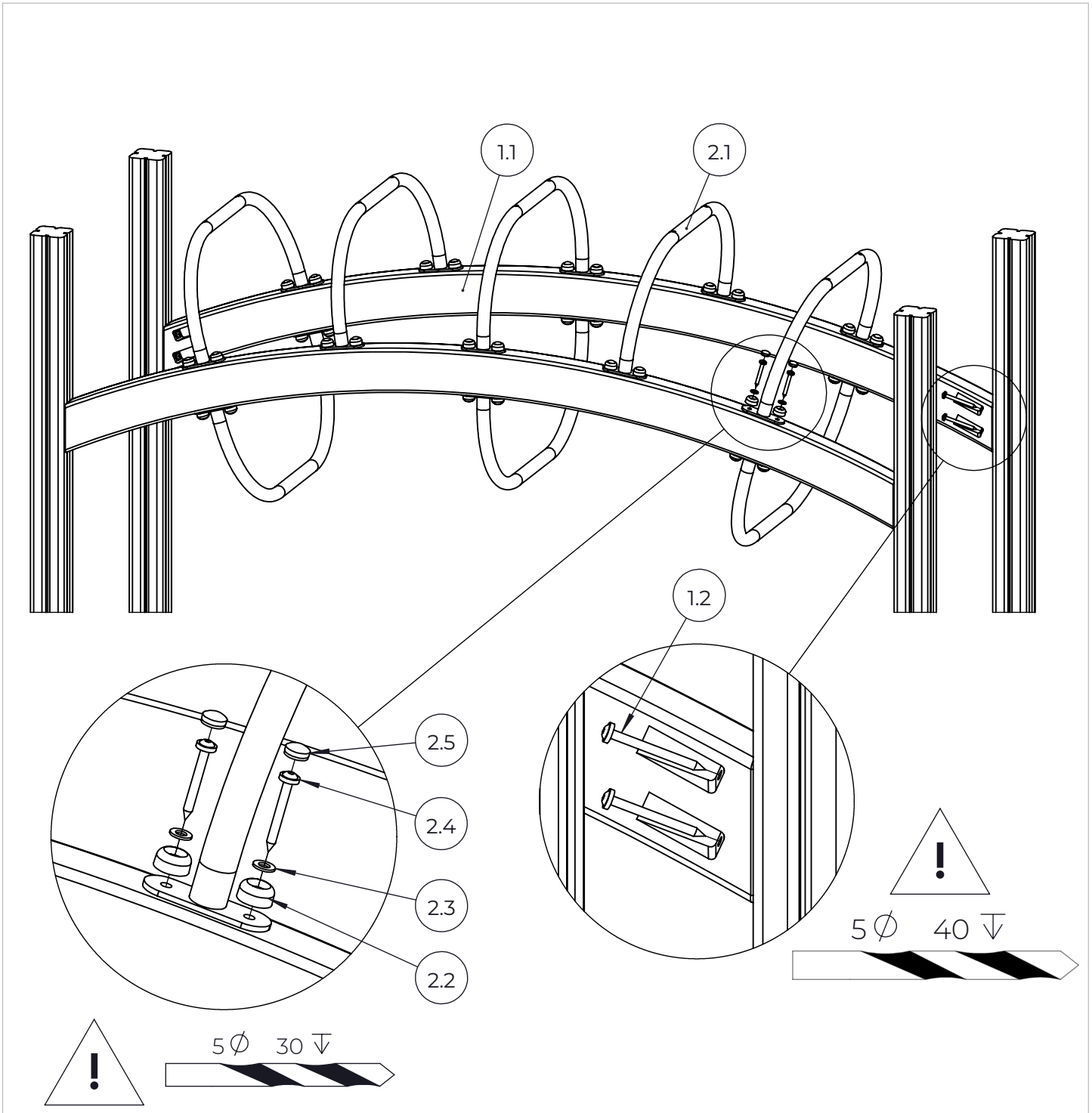

NO.	ITEM CODE			QTY.
1	712875	BEAM MODULE		2
1.1	711913	BEAM	68x120x2324	1
1.2	903093	SPECIAL SCREW	Ø8x90	4
2	712876	CURVED BAR MODULE		8
2.1	914309	CURVED BAR	120x322x837	1
2.2	905083	PLASTIC WASHER	Ø32	4
2.3	901302	WASHER	Ø20/10.5x2	4
2.4	900240	SPECIAL SCREW	Ø8x70	4
2.5	905112	PLASTIC CAP	Ø22	4

Copyright Lappset Group Ltd

712962

Doc.Code: 296007
Rev.: 1.2

DATE: 24.10.2025

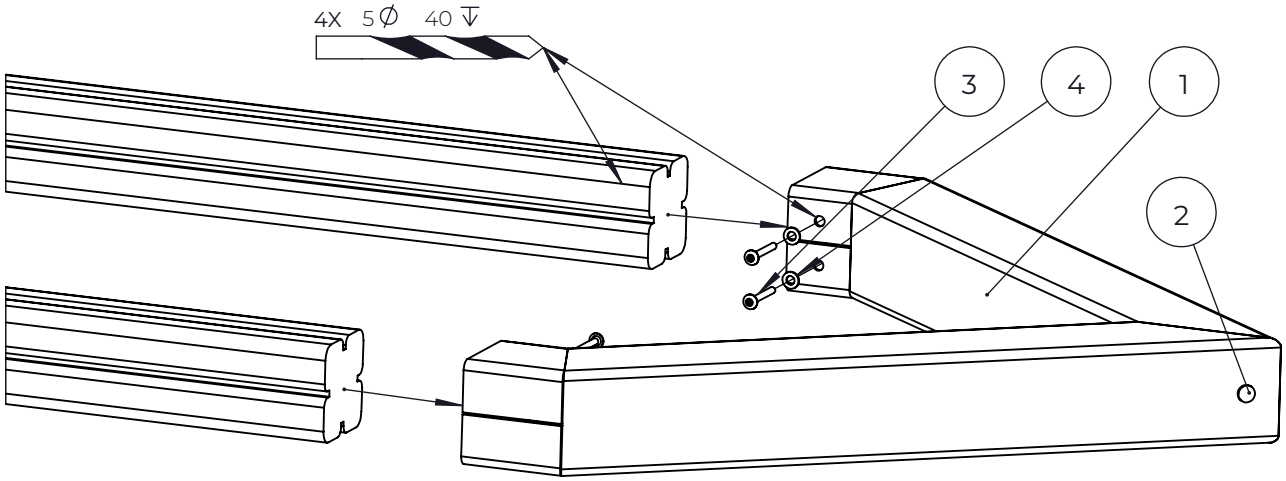

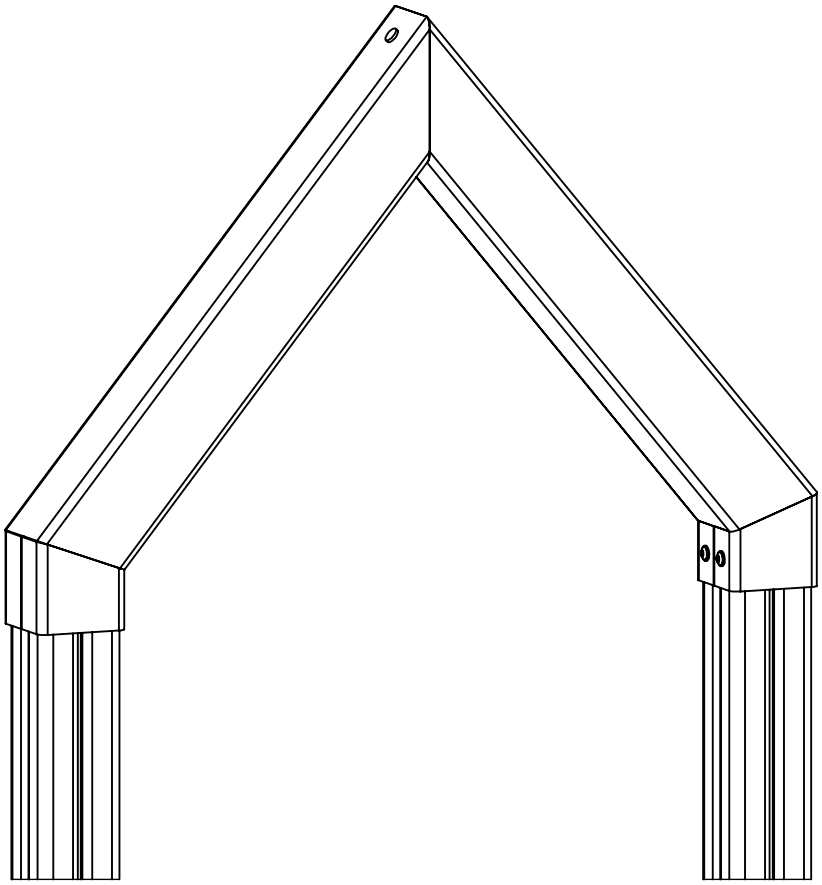

NO.	ITEM CODE			QTY.
1	914549	FRAME	100x635x897	1
2	910415	PLASTIC CAP	Ø16/12,5-14x17	2
3	980123	SPECIAL SCREW	Ø7x60	4
4	909256	WASHER	Ø16/8.4x1.6	4

Copyright Lappset Group Ltd

LAPPSET

712730

Doc.Code: 296384
Rev.: 2

DATE: 26.9.2025

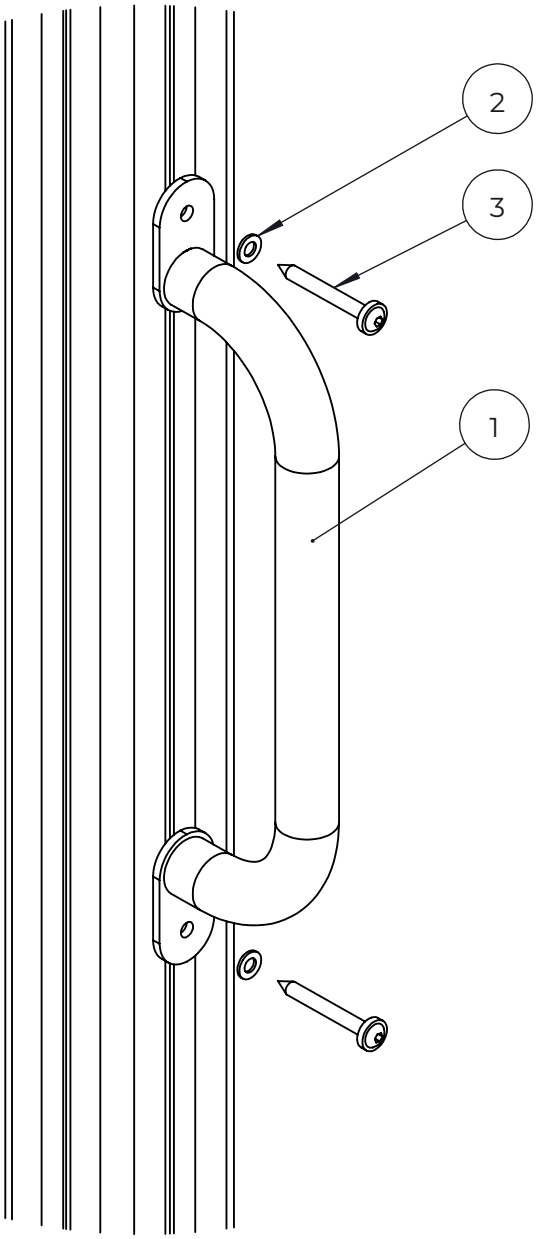

NO.	ITEM CODE			QTY.
1	914419	GRIP	40x119x490	1
2	909256	WASHER	Ø16/8.4x1.6	2
3	900240	SPECIAL SCREW	Ø8x70	2

Copyright Lappset Group Ltd

712751

Doc.Code: 294014
Rev.: 1.1

DATE: 26.9.2025

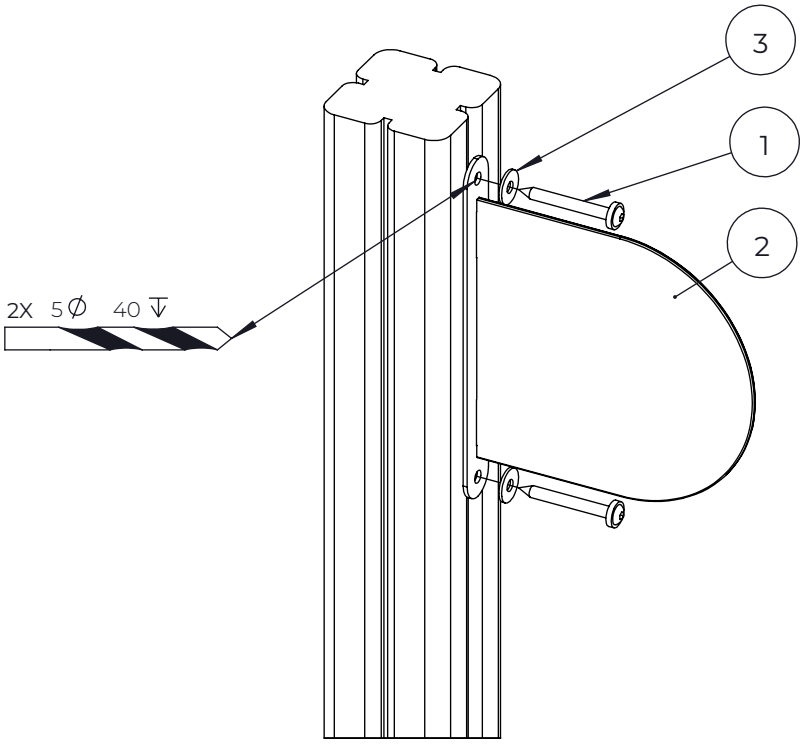

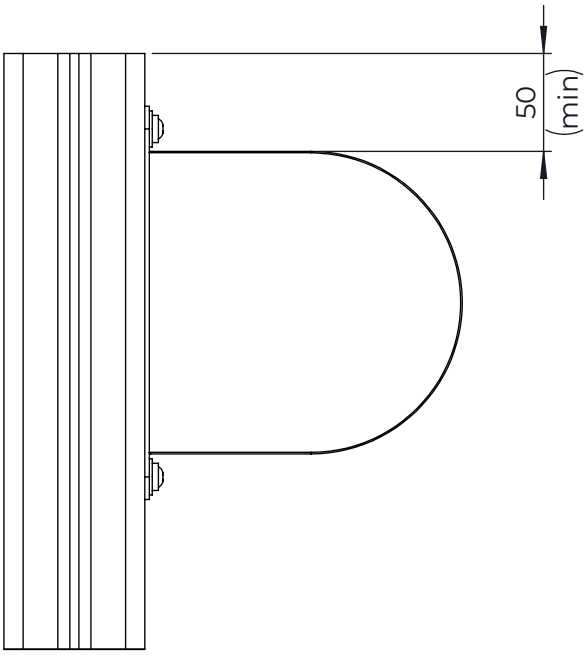

NO.	ITEM CODE			QTY.
1	900240	SPECIAL SCREW	Ø8x70	2
2	914264	STREAMER	30x217x260	1
3	980152	WASHER	Ø24/8.4x2	2

Copyright Lappset Group Ltd

712780

Doc.Code: 296034
Rev.: 1.1

DATE: 29.9.2025

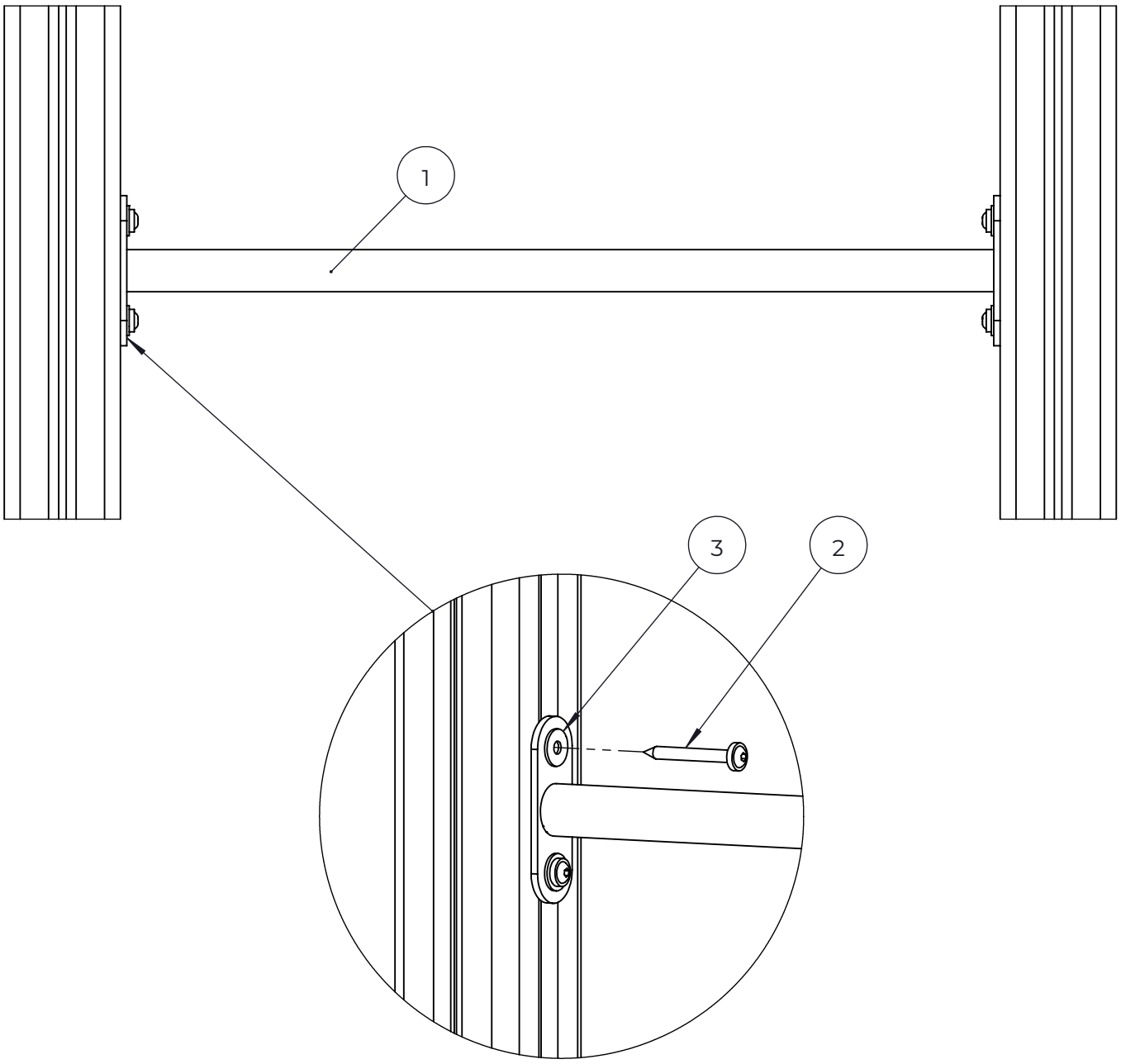

NO.	ITEM CODE			QTY.
1	914099	BAR ELEMENT	40x120x704	1
2	900240	SPECIAL SCREW	Ø8x70	4
3	980152	WASHER	Ø24/8.4x2	4

Copyright Lappset Group Ltd

713003

Doc.Code: 297735
Rev.: 1

DATE: 22.7.2025

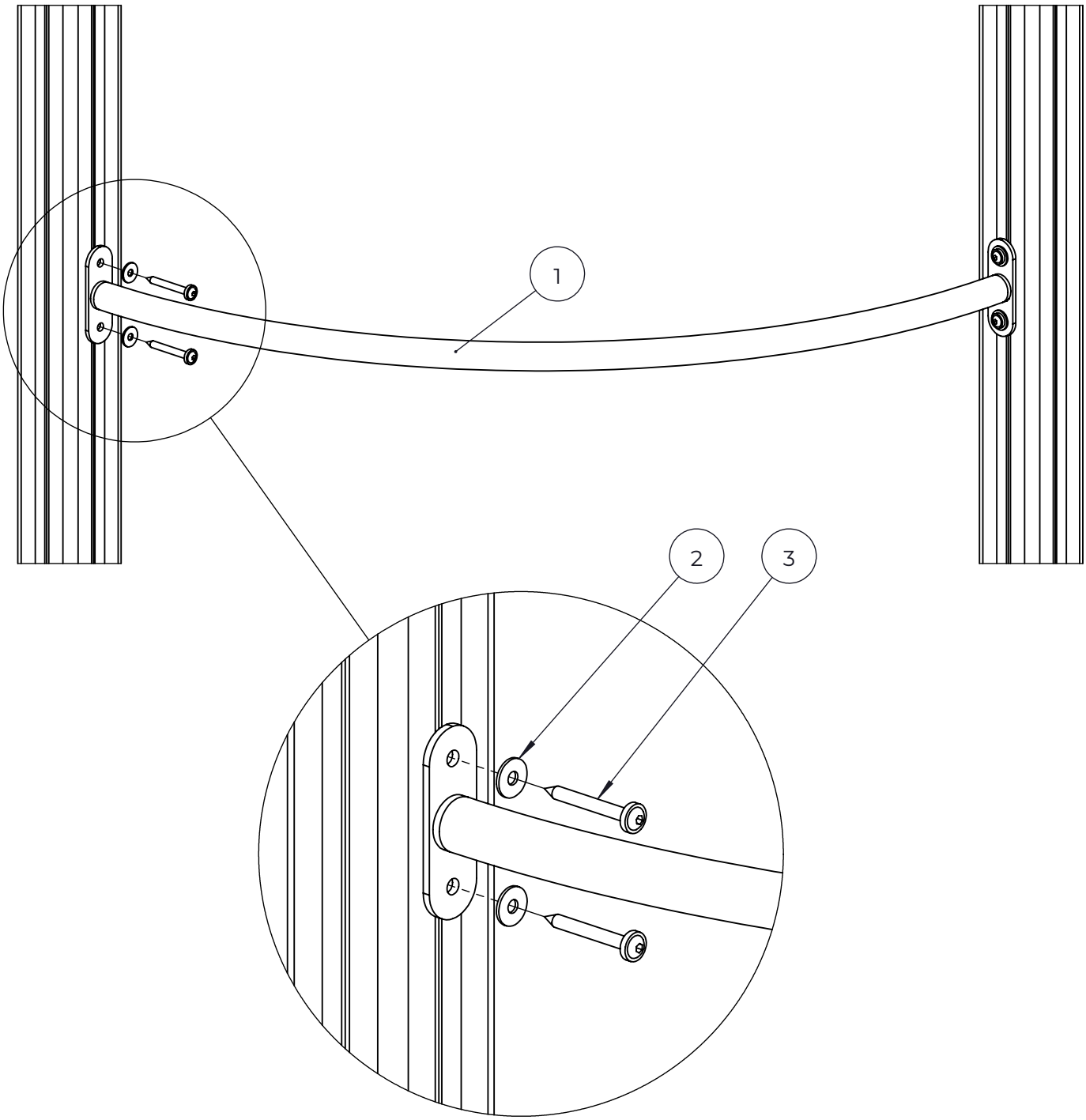

NO.	ITEM CODE			QTY.
1	914298	CURVED BAR		1
2	980152	WASHER	Ø24/8.4x2	4
3	900240	SPECIAL SCREW	Ø8x70	4

Copyright Lappset Group Ltd

712562

Doc.Code: 296044
Rev.: 1

DATE: 21.7.2025

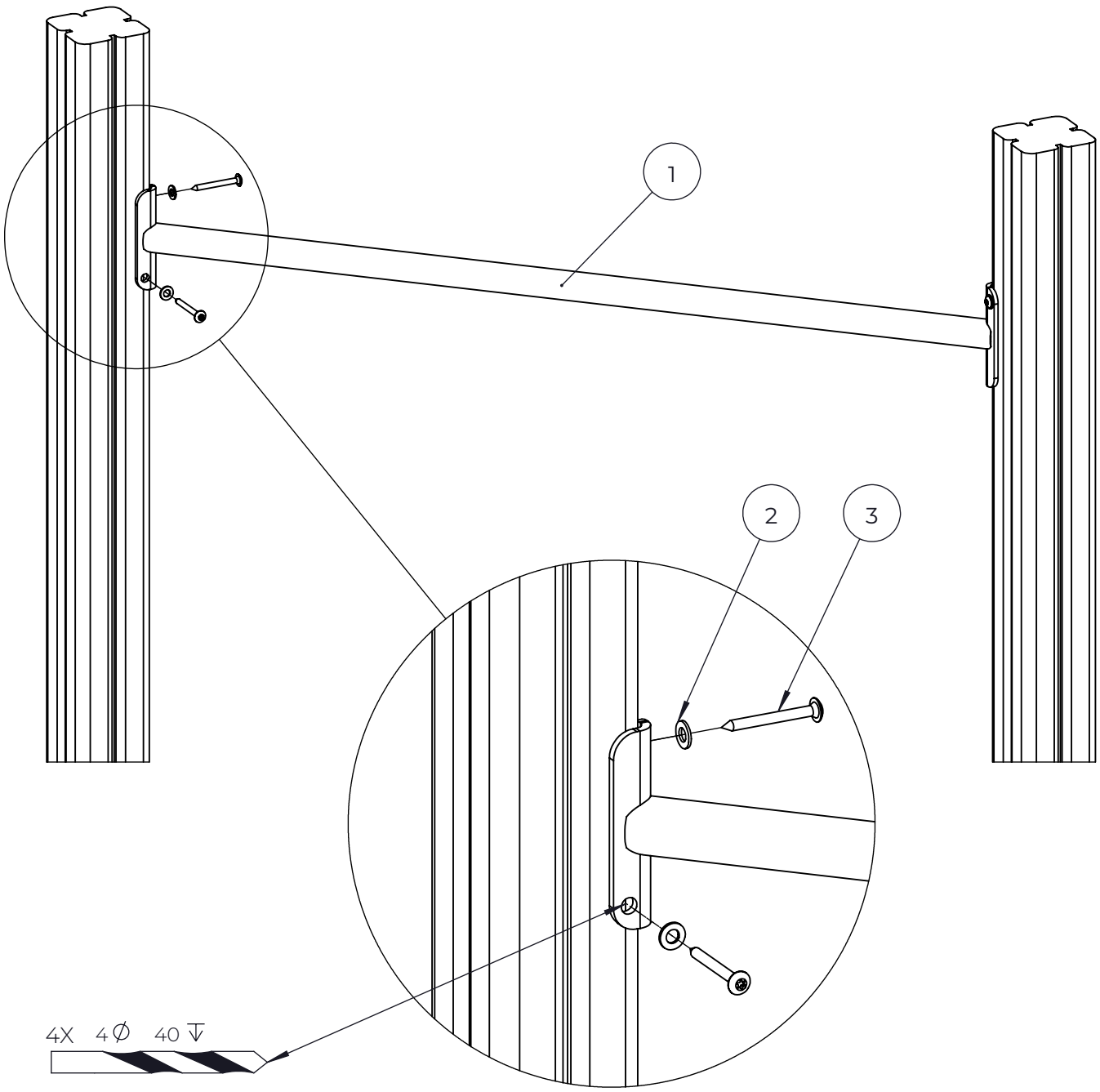

NO.	ITEM CODE			QTY.
1	914895	BAR ELEMENT	1027	1
2	909256	WASHER	Ø16/8.4x1.6	4
3	980123	SPECIAL SCREW	Ø7x60	4

Copyright Lappset Group Ltd

712397

Doc.Code: 301018
Rev.: 1.1

DATE: 23.9.2025

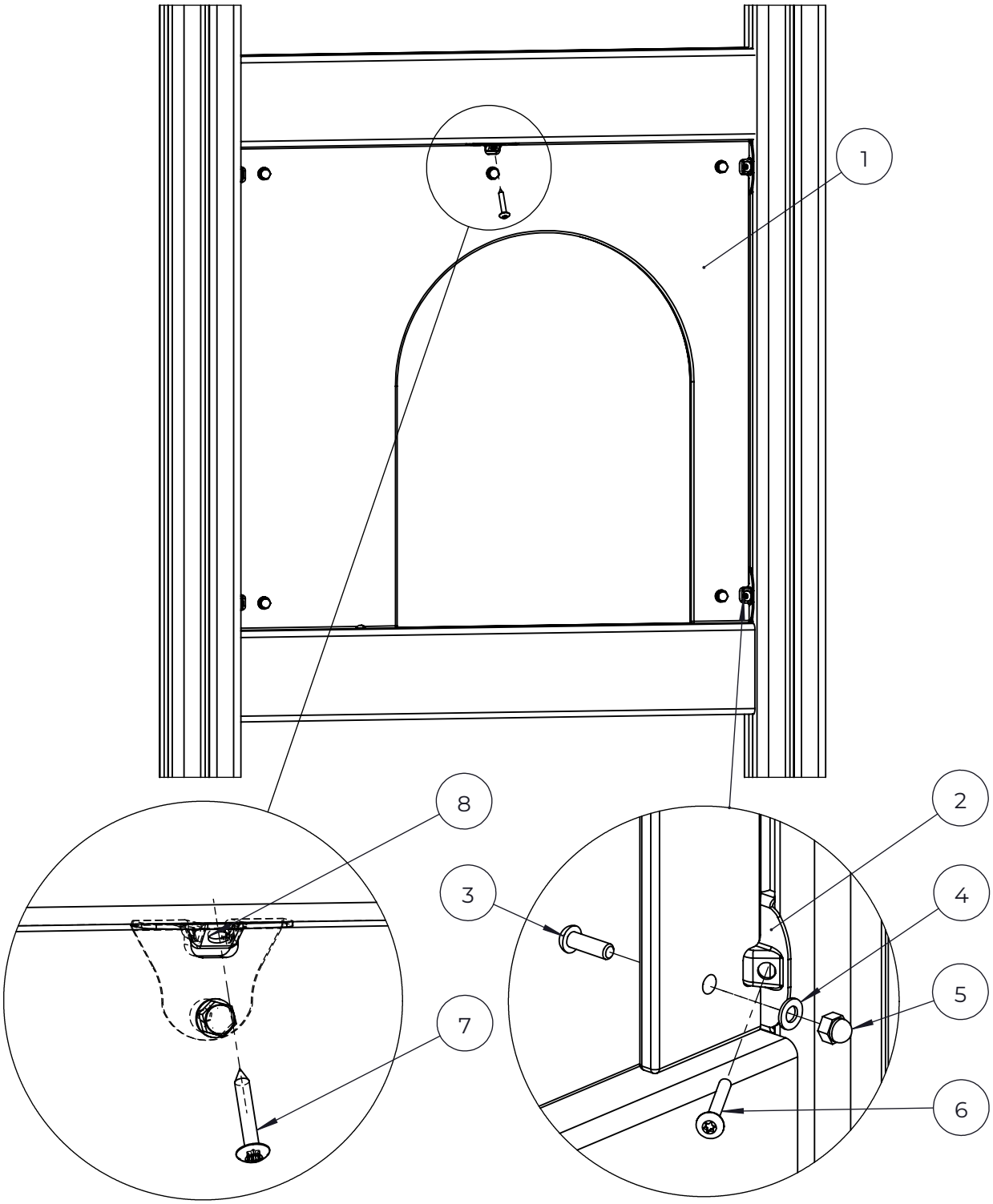

NO.	ITEM CODE			QTY.
1	712468	PLATE	12x640x702	1
2	903176	CLAMP		4
3	909850	ALLEN SCREW	M8x25	5
4	909256	WASHER	Ø16/8.4x1.6	5
5	909633	NUT	M8	5
6	980123	SPECIAL SCREW	Ø7x60	4
7	980128	SPECIAL SCREW	Ø7x40	1
8	903215	CLAMP		1

Copyright Lappset Group Ltd

712398

Doc.Code: 304545
Rev.: 1.1

DATE: 7.11.2025

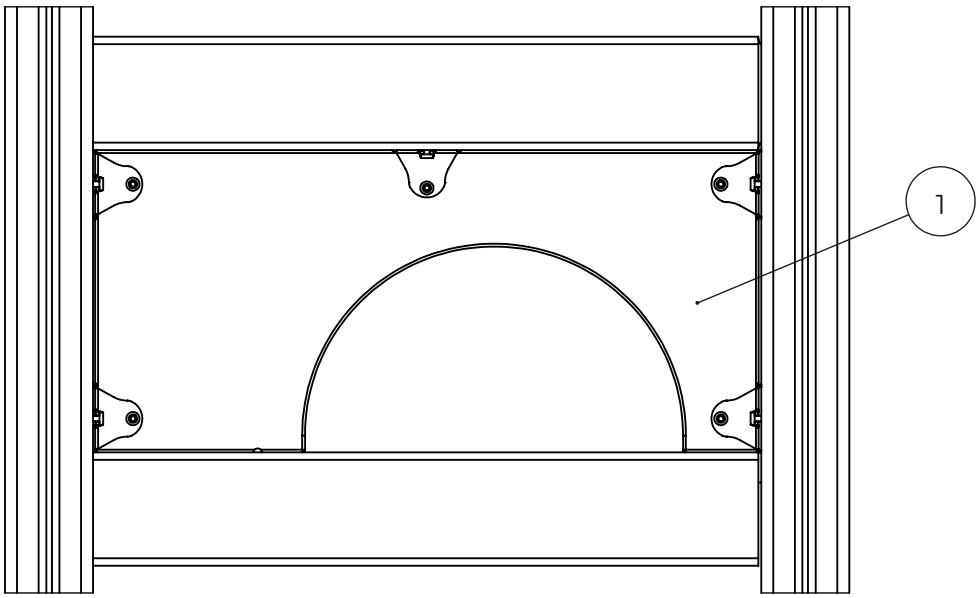

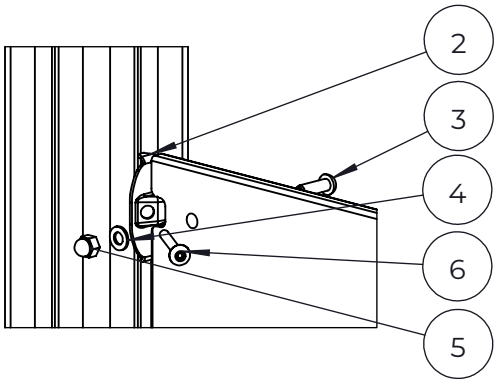

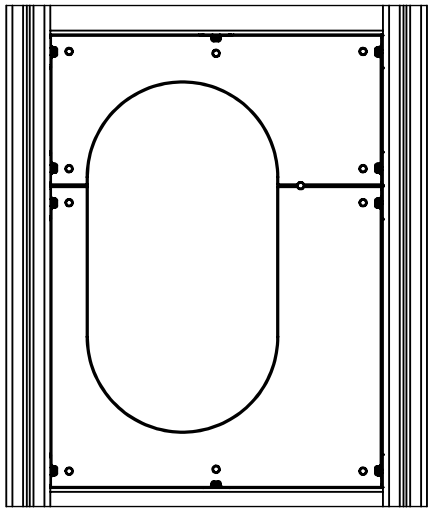

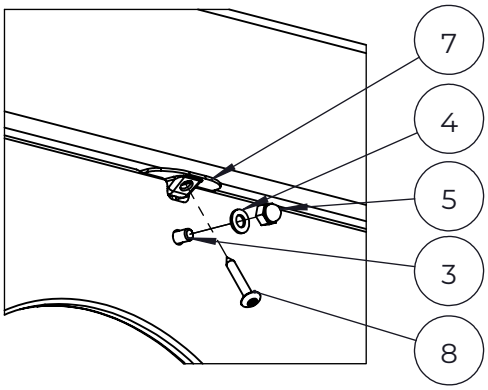

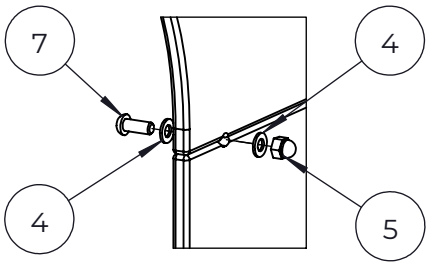

NO.	ITEM CODE			QTY.
1	711692	PLATE	12x320x702	1
2	903176	CLAMP		4
3	909850	ALLEN SCREW	M8x25	5
4	909256	WASHER	Ø16/8.4x1.6	5
5	909633	NUT	M8	5
6	980123	SPECIAL SCREW	Ø7x60	4
7	903215	CLAMP		1
8	980128	SPECIAL SCREW	Ø7x40	1

Copyright Lappset Group Ltd

712760

Doc.Code: 294065
Rev.: 1.3

DATE: 23.3.2026

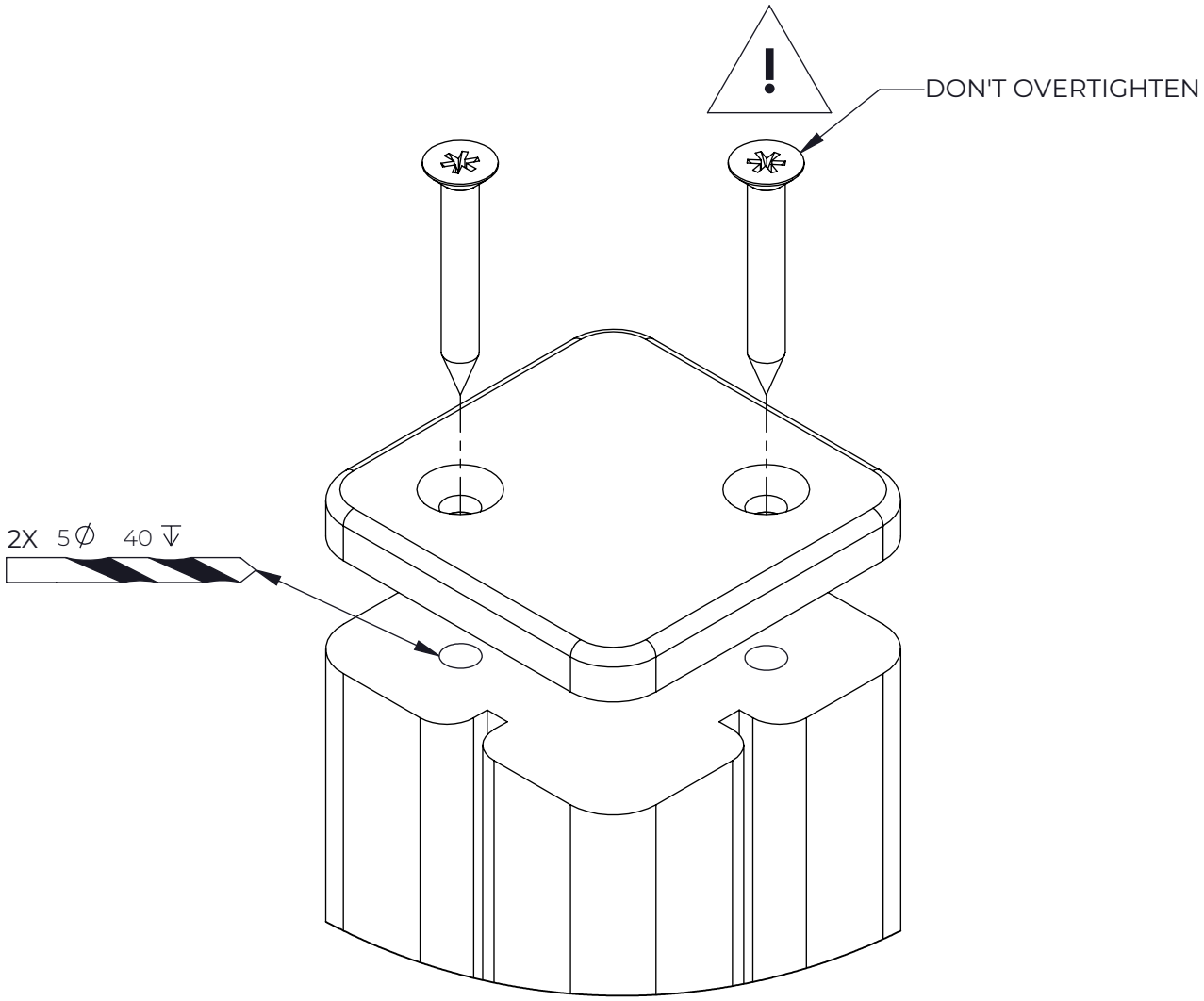

NO.	ITEM CODE			QTY.
1	906630	SCREW	Ø8x60	2
2	711807	TOP HAT	93x93x12	1

Copyright Lappset Group Ltd

712788

Doc.Code: 308064
Rev.: 2.1

DATE: 7.11.2025

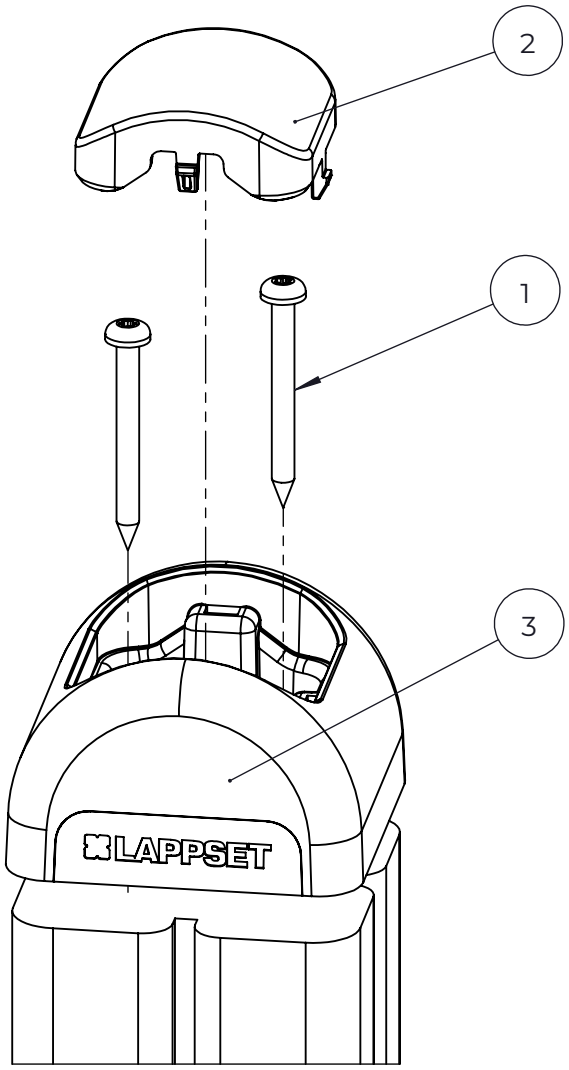

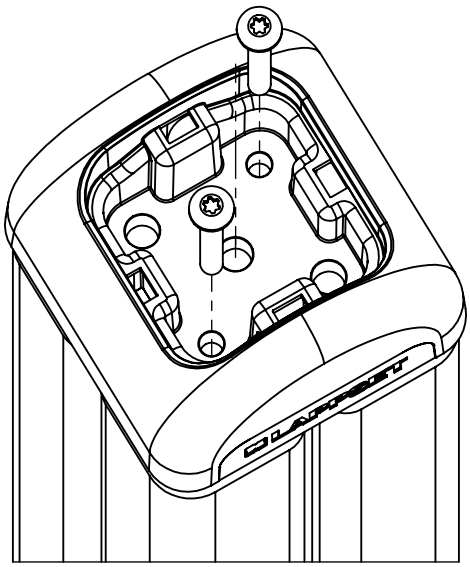

NO.	ITEM CODE			QTY.
1	980131	SCREW	Ø6x60	2
2	915379	TOP HAT COVER	67,5x67,6x34	1
3	915378	TOP HAT BASE	95x95x60	1

Copyright Lappset Group Ltd

712953

Doc.Code: 302520
Rev.: 2

DATE: 26.9.2025

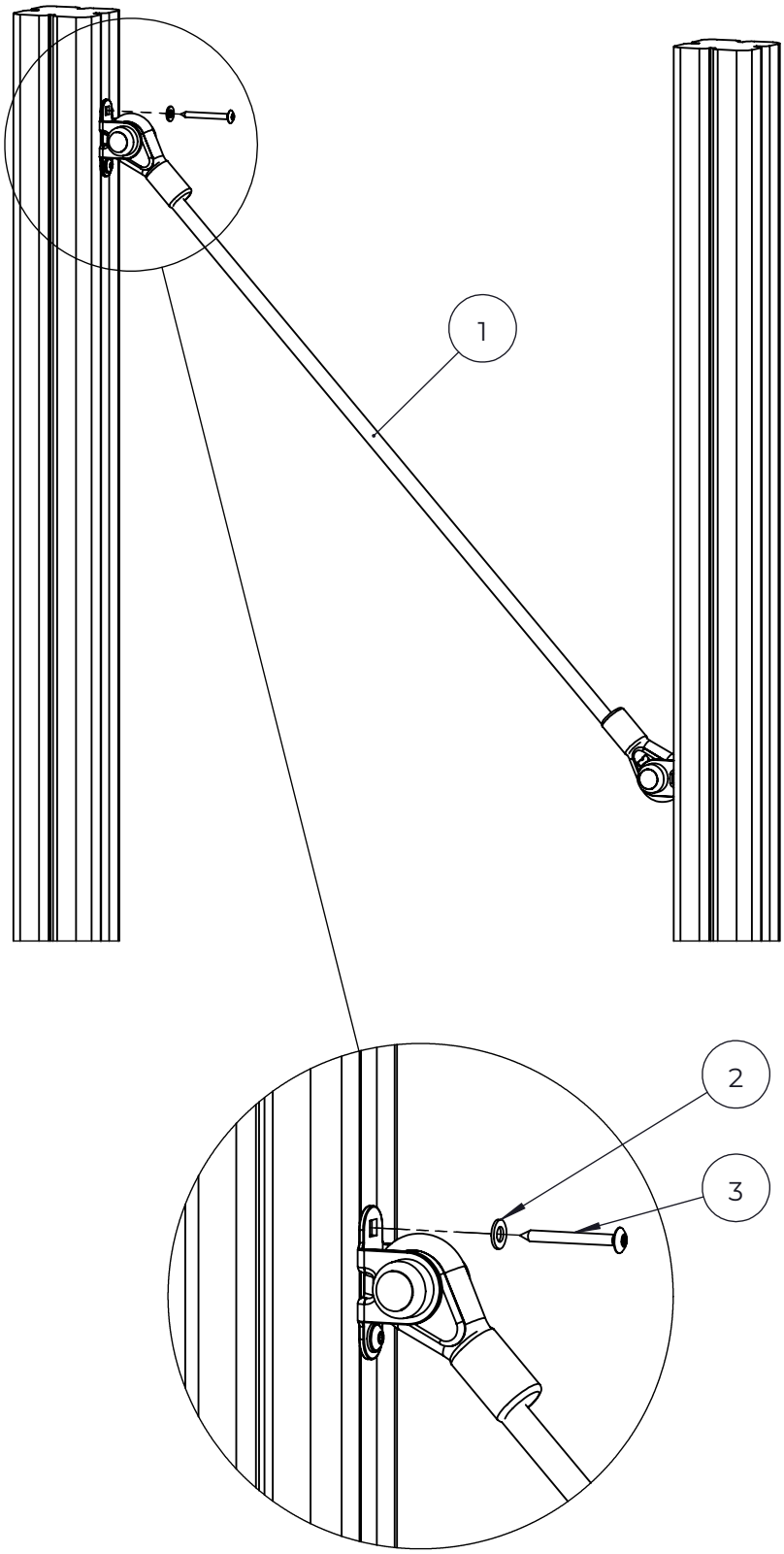

NO.	ITEM CODE			QTY.
1	713259	ROPE ELEMENT	L 926	1
2	909256	WASHER	Ø16/8.4x1.6	4
3	980123	SPECIAL SCREW	Ø7x60	4

Copyright Lappset Group Ltd

LAPPSET

712953

Doc.Code: 302520
Rev.: 2

DATE: 26.9.2025

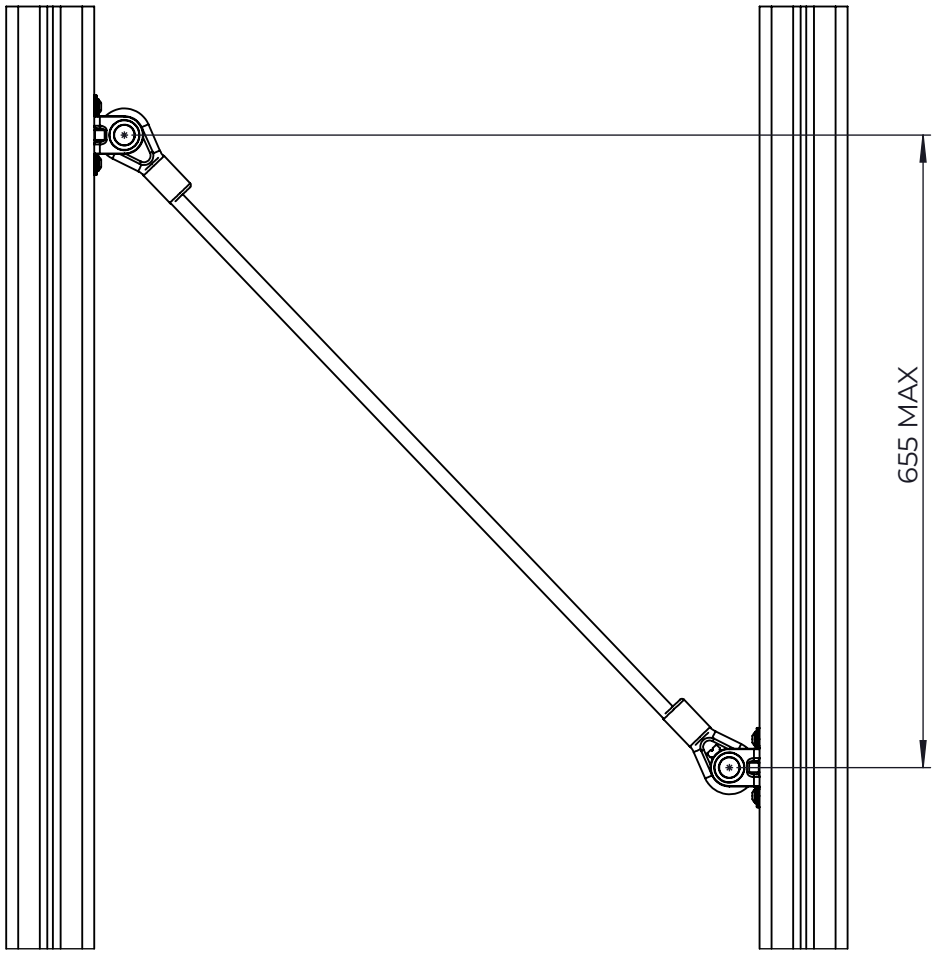

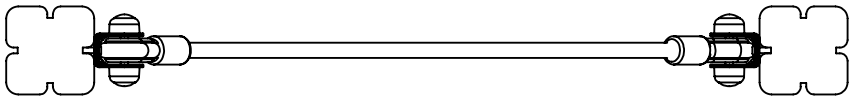

Copyright Lappset Group Ltd

713088

Doc.Code: 302892
Rev.: 1.2

DATE: 9.12.2025

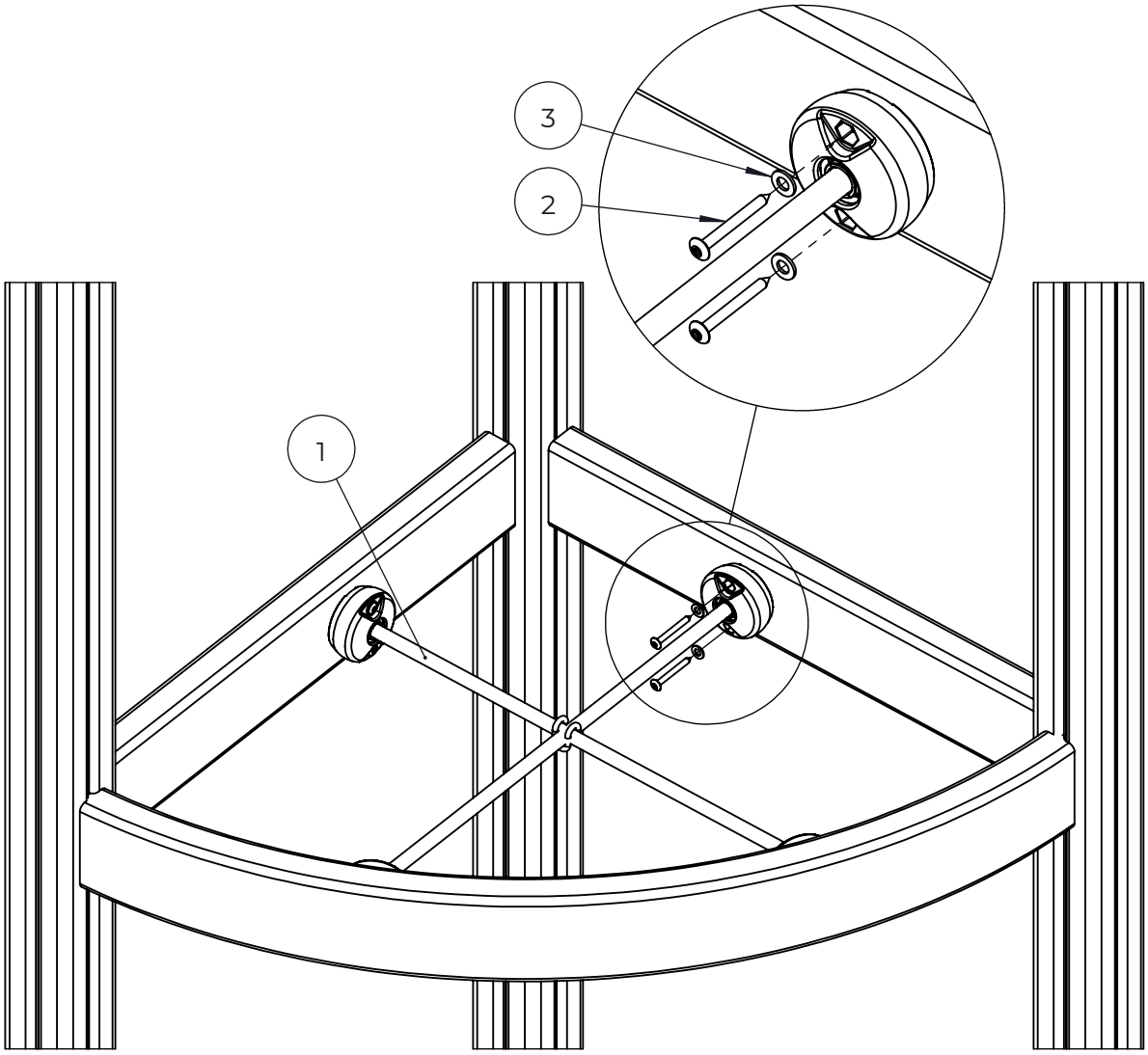

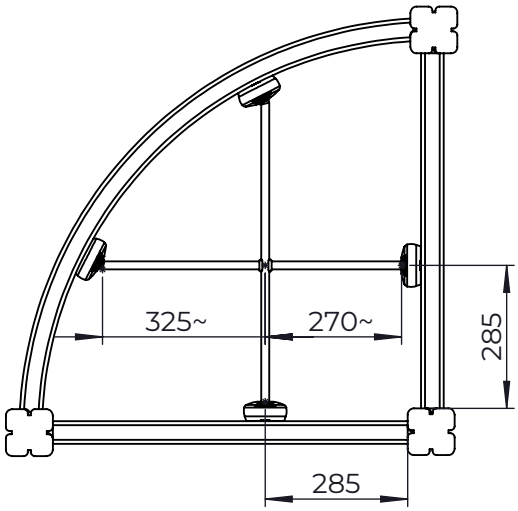

NO.	ITEM CODE			QTY.
1	712198	NET ASSEMBLY	670x670	1
2	980123	SPECIAL SCREW	Ø7x60	8
3	909256	WASHER	Ø16/8.4x1.6	8

Copyright Lappset Group Ltd

713080

Doc.Code: 302578
Rev.: 1.1

DATE: 29.10.2025

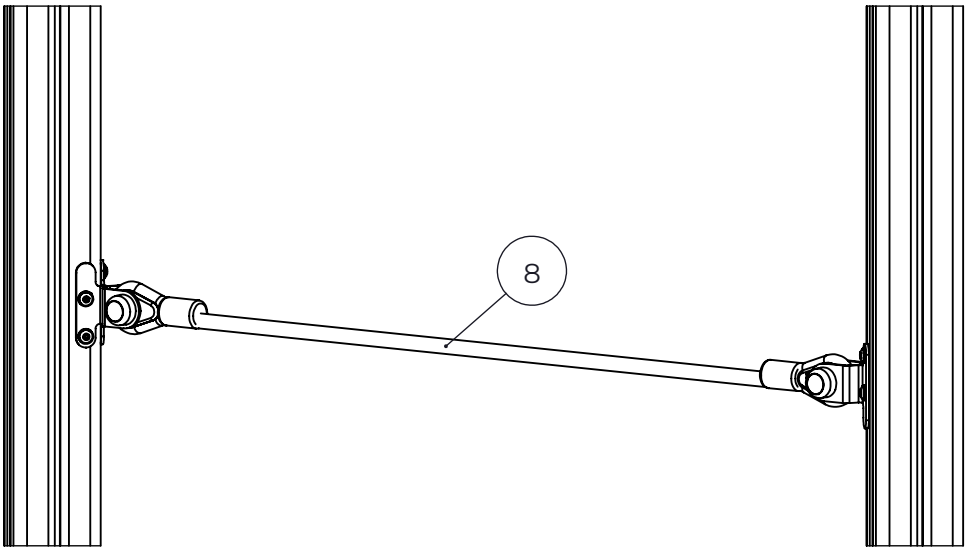

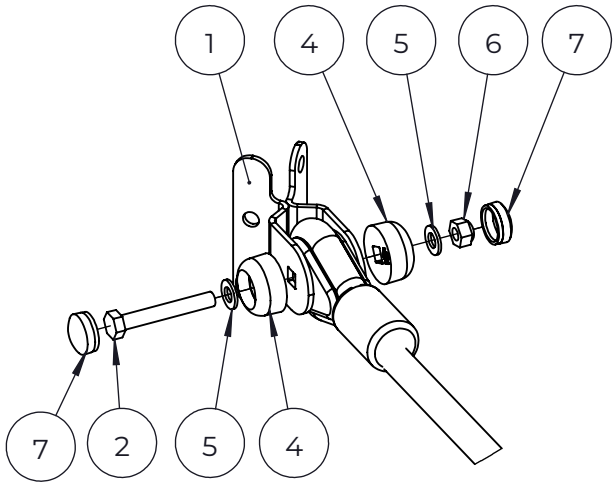

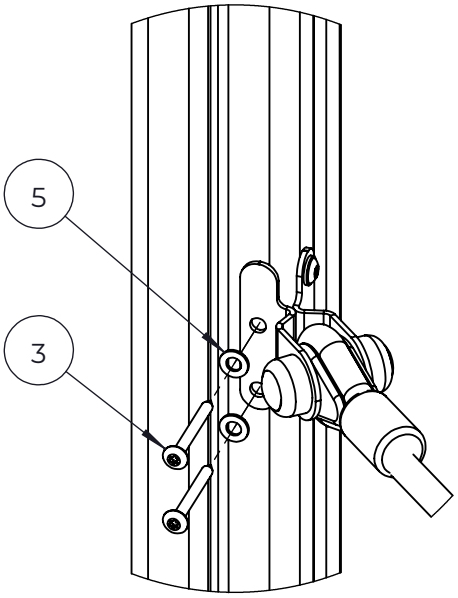

NO.	ITEM CODE			QTY.
1	915271	FLANGE	3x	4
2	909568	BOLT	M8x55	2
3	980123	SPECIAL SCREW	Ø7x60	8
4	905083	PLASTIC WASHER	Ø32	4
5	909256	WASHER	Ø16/8.4x1.6	12
6	980160	NUT	M8	2
7	905112	PLASTIC CAP	Ø22	4
8	712955	ROPE ELEMENT	L 926	1

Copyright Lappset Group Ltd

LAPPSET

712796

Doc.Code: 302582
Rev.: 1

DATE: 30.6.2025

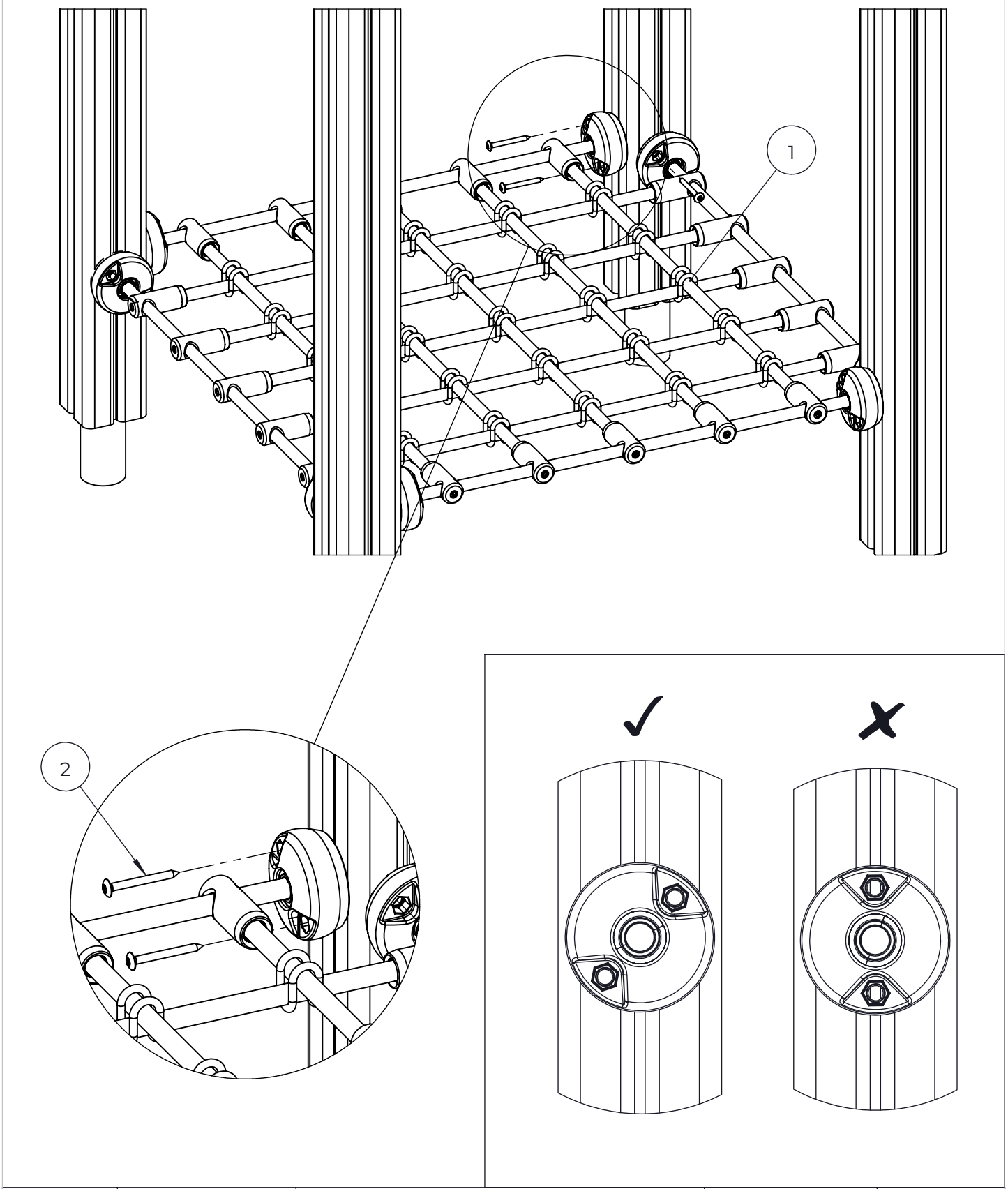

NO.	ITEM CODE			QTY.
1	712182	NET ASSEMBLY	707x707	1
2	980123	SPECIAL SCREW	Ø7x60	16

Copyright Lappset Group Ltd

712929

Doc.Code: 309755
Rev.: 1

DATE: 18.11.2025

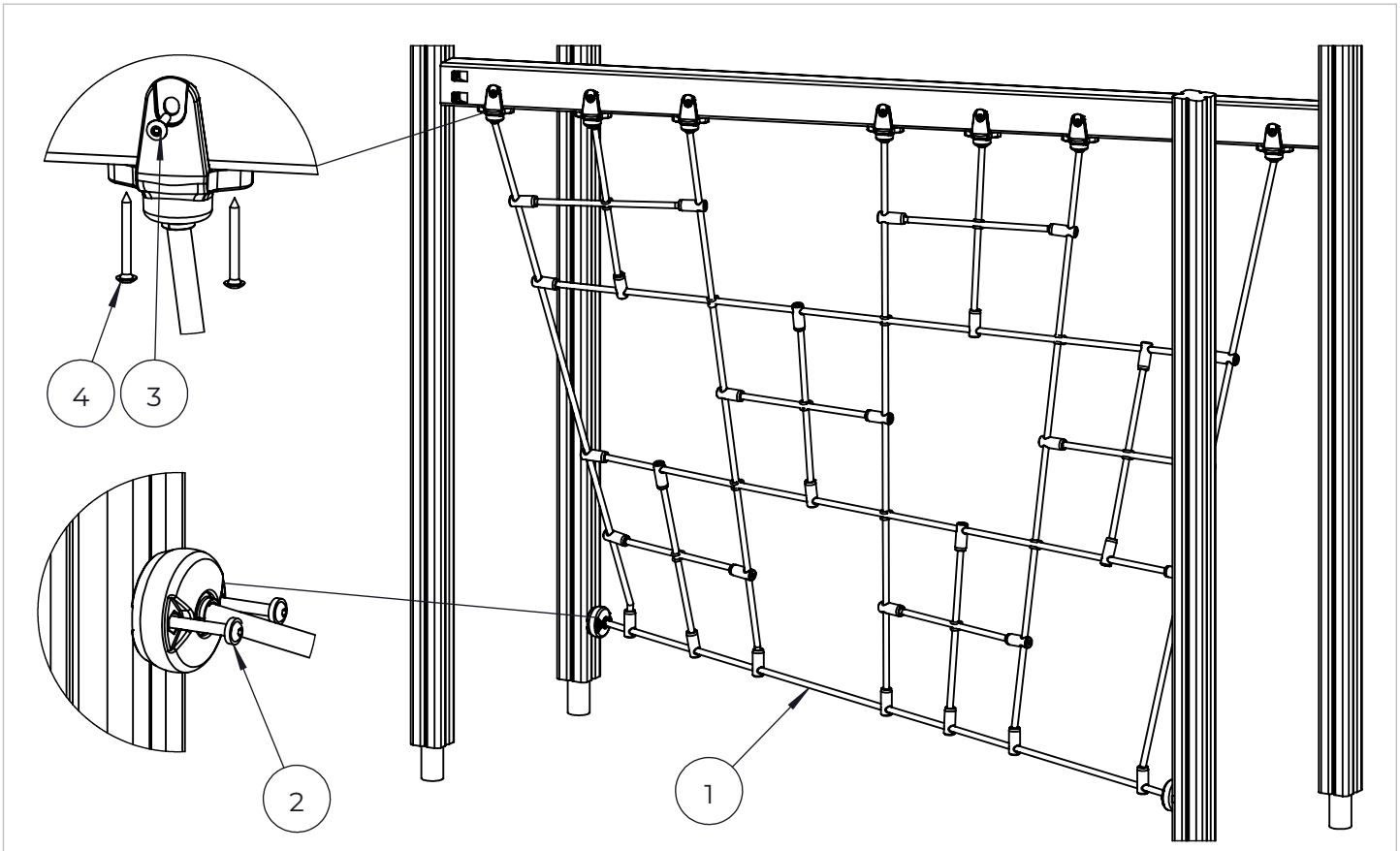

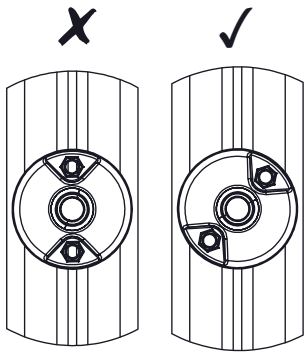

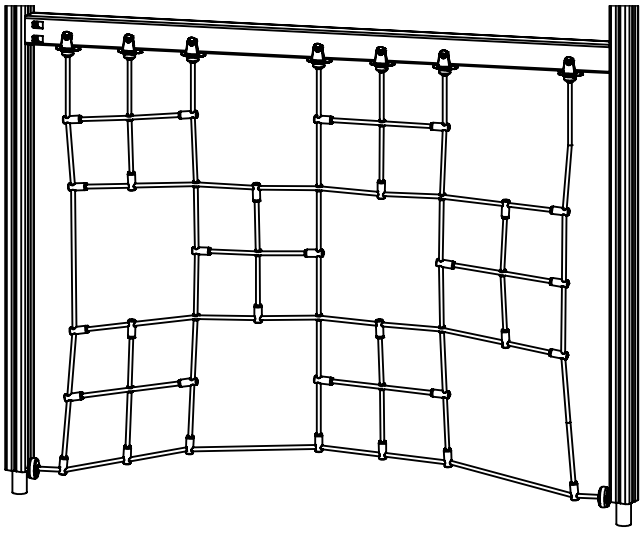

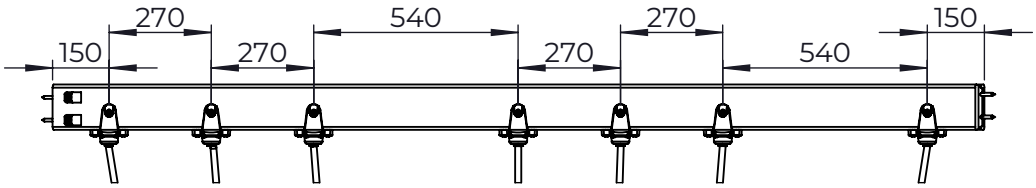

NO.	ITEM CODE			QTY.
1	711945	ROPE NET		1
2	900240	SPECIAL SCREW	Ø8x70	4
3	980128	SPECIAL SCREW	Ø7x40	7
4	980123	SPECIAL SCREW	Ø7x60	14

Copyright Lappset Group Ltd

713087

Doc.Code: 304560
Rev.: 1

DATE: 24.9.2025

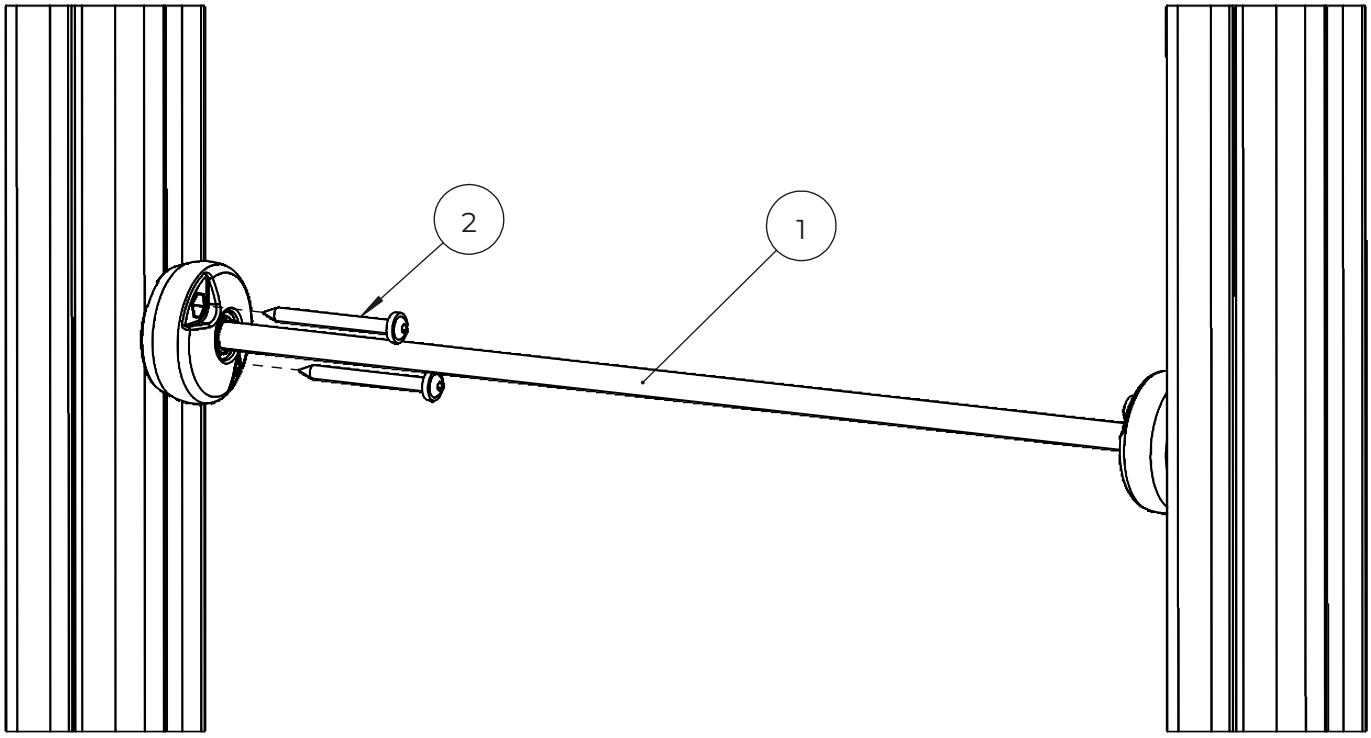

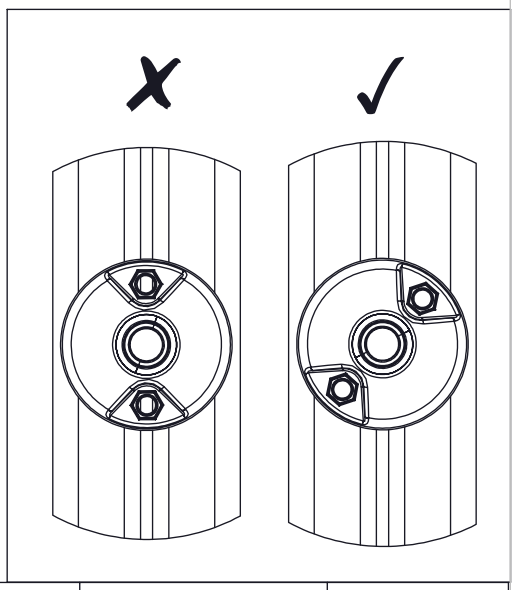

NO.	ITEM CODE			QTY.
1	709649	ROPE FENCE	Ø16x705	1
2	903093	SPECIAL SCREW	Ø8x90	4

Copyright Lappset Group Ltd

712818

Doc.Code: 296399
Rev.: 1

DATE: 30.6.2025

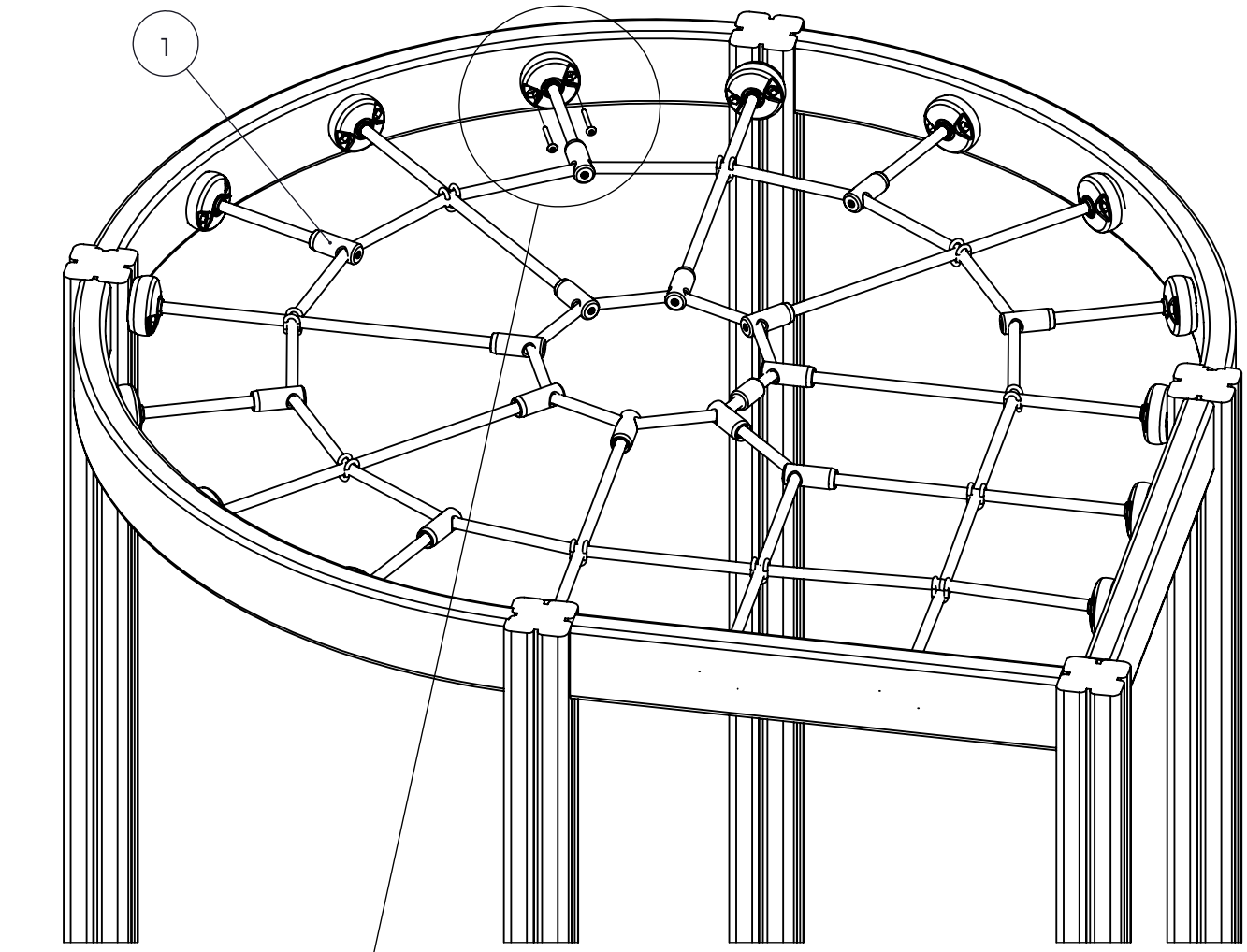

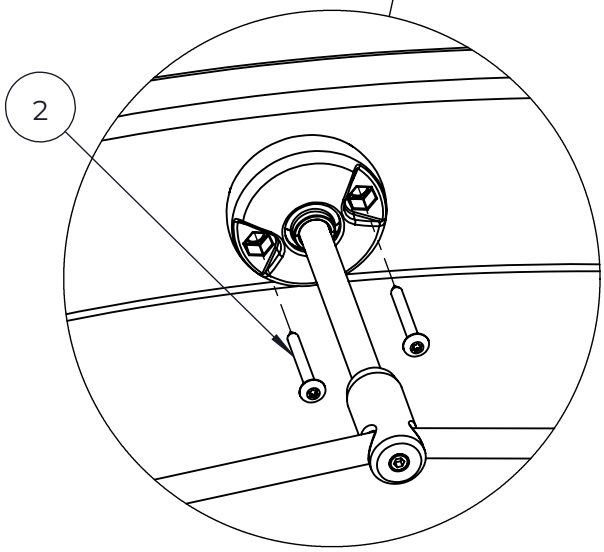

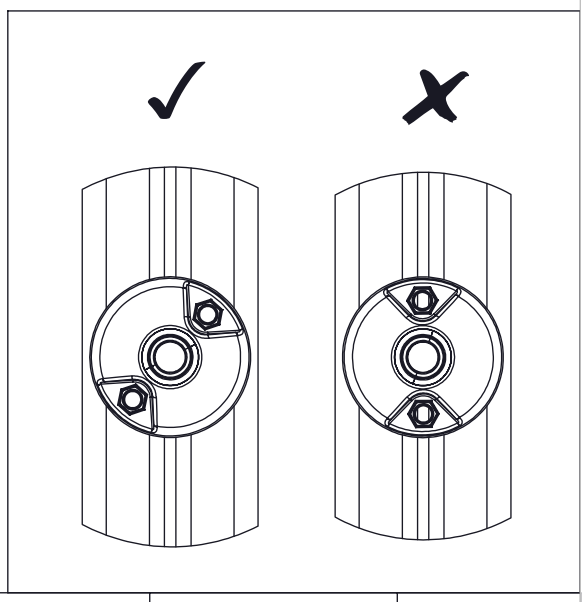

NO.	ITEM CODE			QTY.
1	711991	ROPE NET	1528x1528	1
2	980123	SPECIAL SCREW	Ø7x60	34

Copyright Lappset Group Ltd

712820

Doc.Code: 303308
Rev.: 1

DATE: 24.7.2025

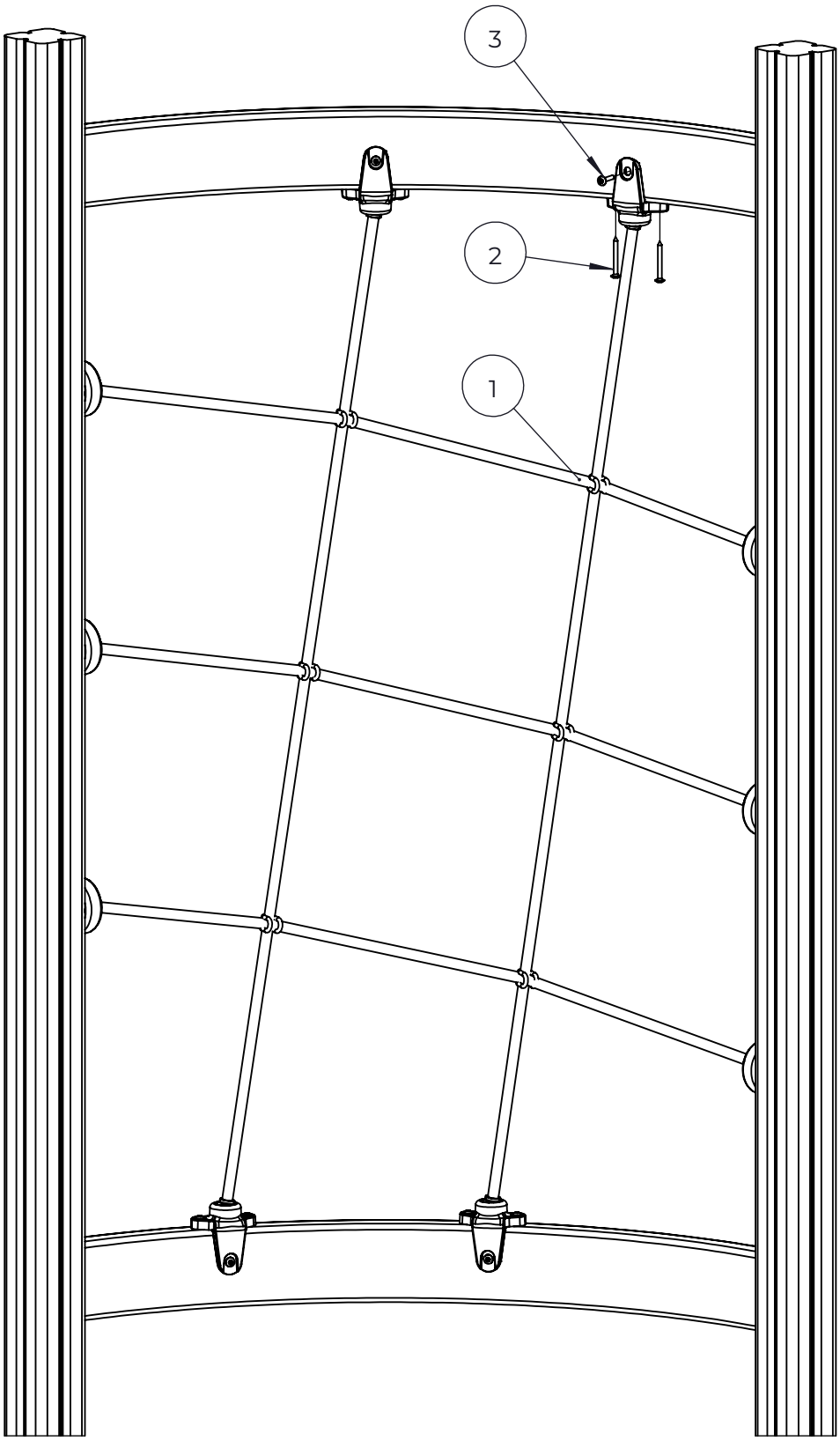

NO.	ITEM CODE			QTY.
1	712222	NET ASSEMBLY		1
2	980123	SPECIAL SCREW	Ø7x60	20
3	980128	SPECIAL SCREW	Ø7x40	4

Copyright Lappset Group Ltd

712820

Doc.Code: 303308
Rev.: 1

DATE: 24.7.2025

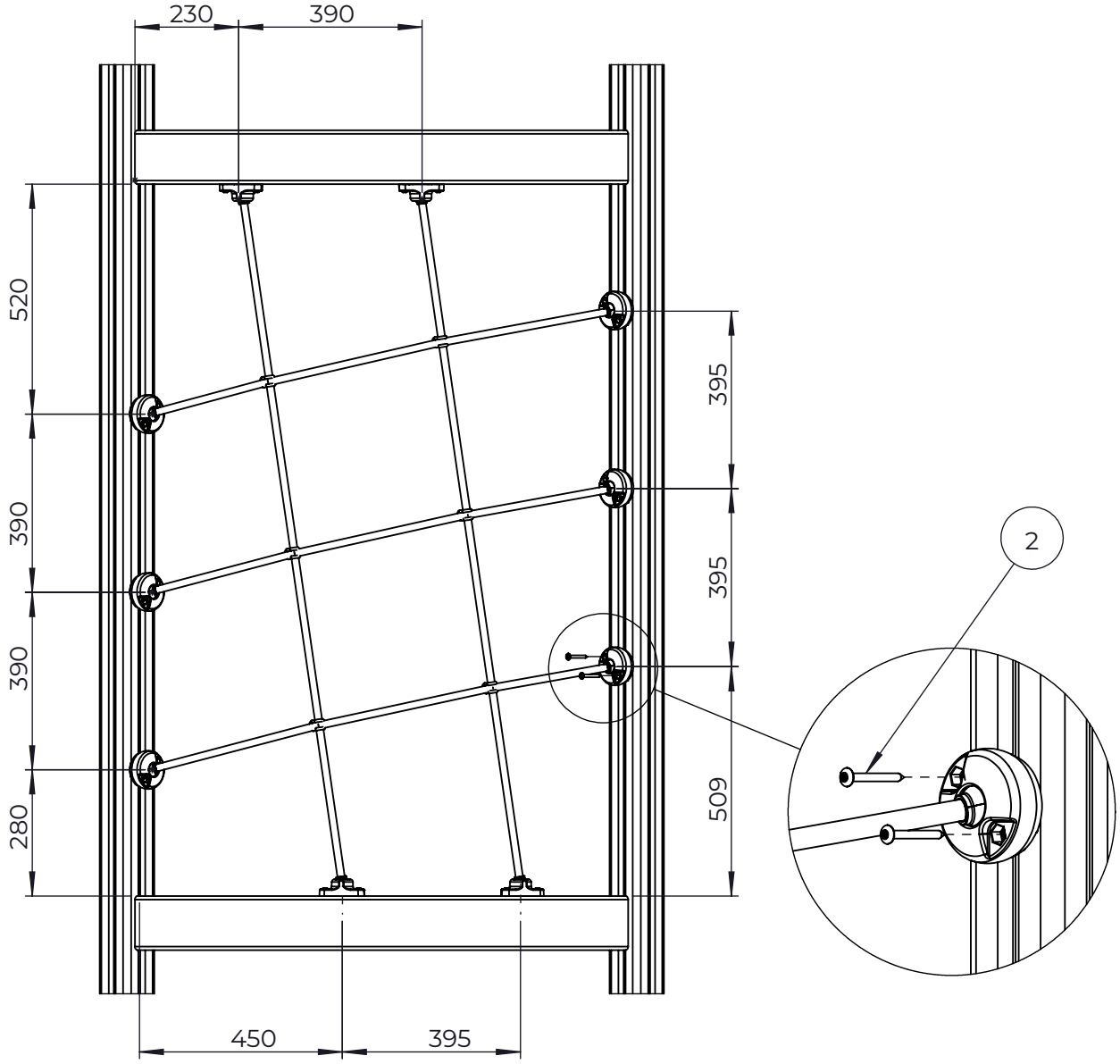

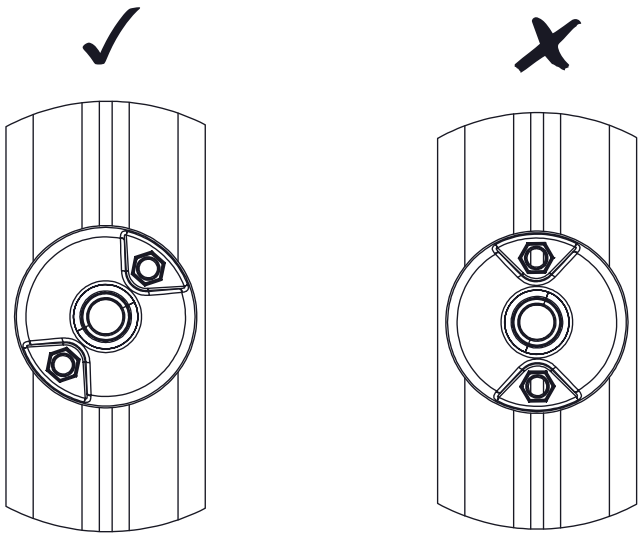

Copyright Lappset Group Ltd

LAPPSET

712823

Doc.Code: 295820
Rev.: 1

DATE: 11.7.2025

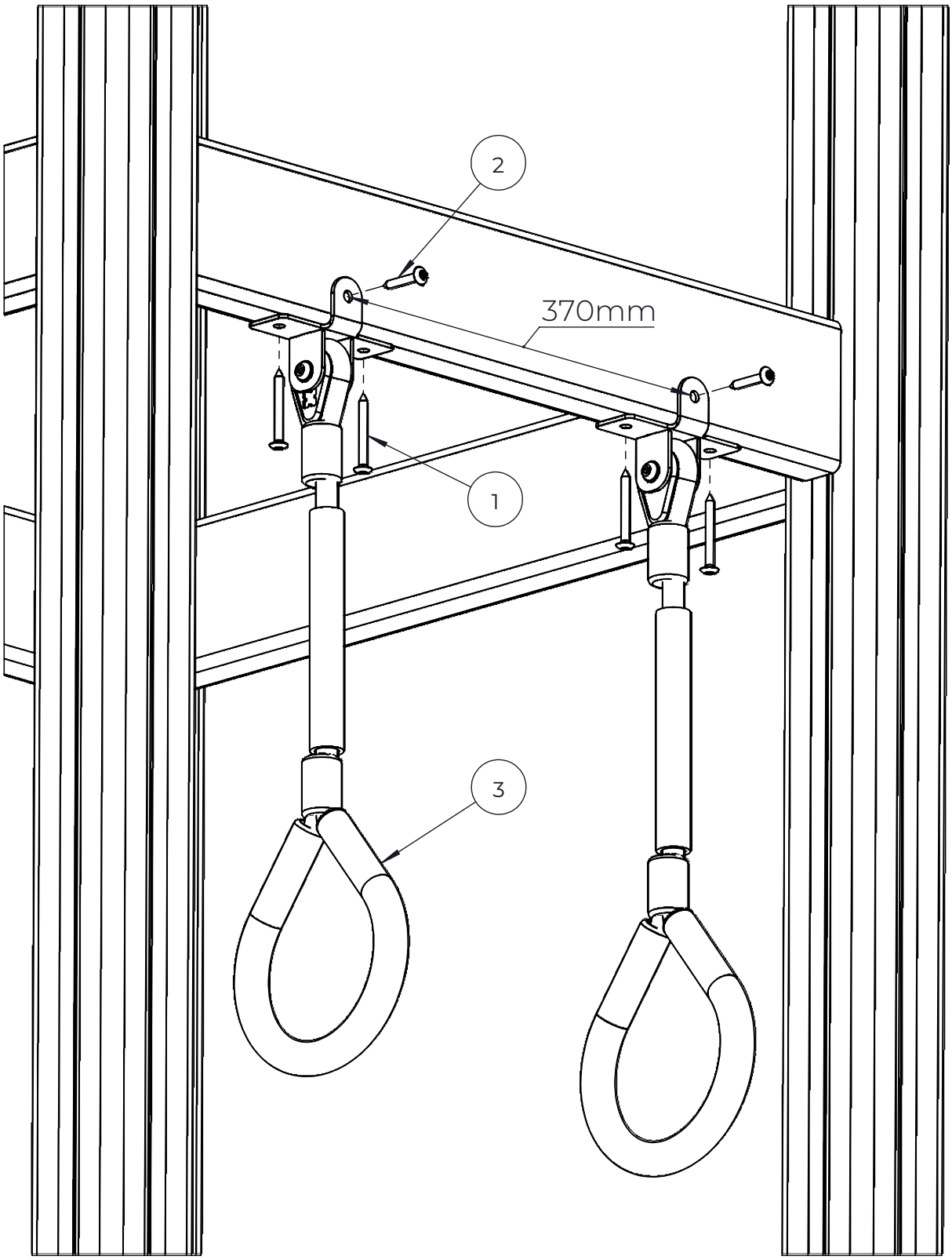

NO.	ITEM CODE			QTY.
1	980123	SPECIAL SCREW	Ø7x60	4
2	980128	SPECIAL SCREW	Ø7x40	2
3	711813	ROPE RINGS PAIR		1

Copyright Lappset Group Ltd

712822

Doc.Code: 295806
Rev.: 1

DATE: 21.7.2025

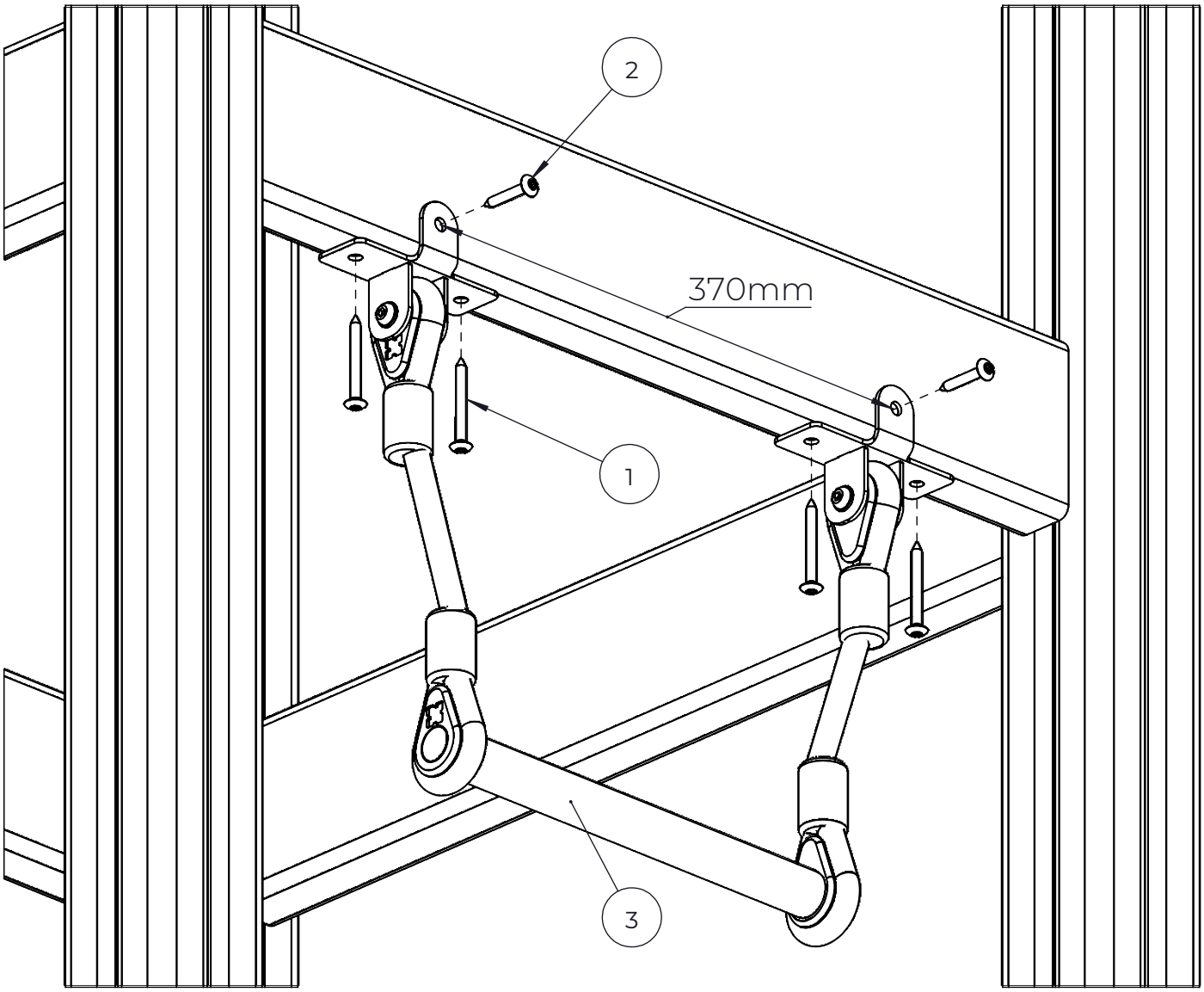

NO.	ITEM CODE			QTY.
1	980123	SPECIAL SCREW	Ø7x60	4
2	980128	SPECIAL SCREW	Ø7x40	2
3	711304	TRAPEZ	_	1

Copyright Lappset Group Ltd

712539

Doc.Code: 302609
Rev.: 2

DATE: 29.10.2025

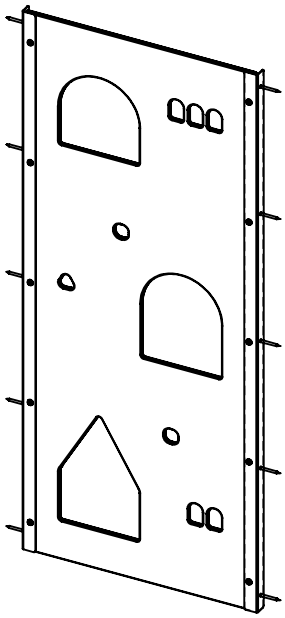

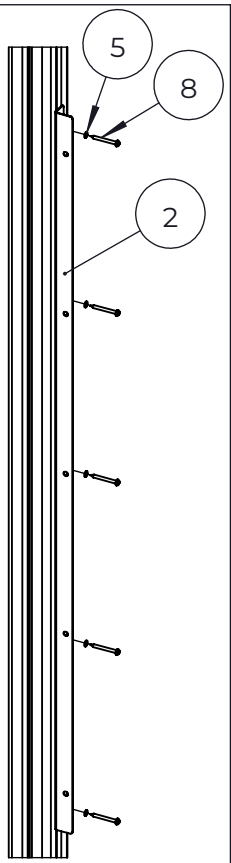

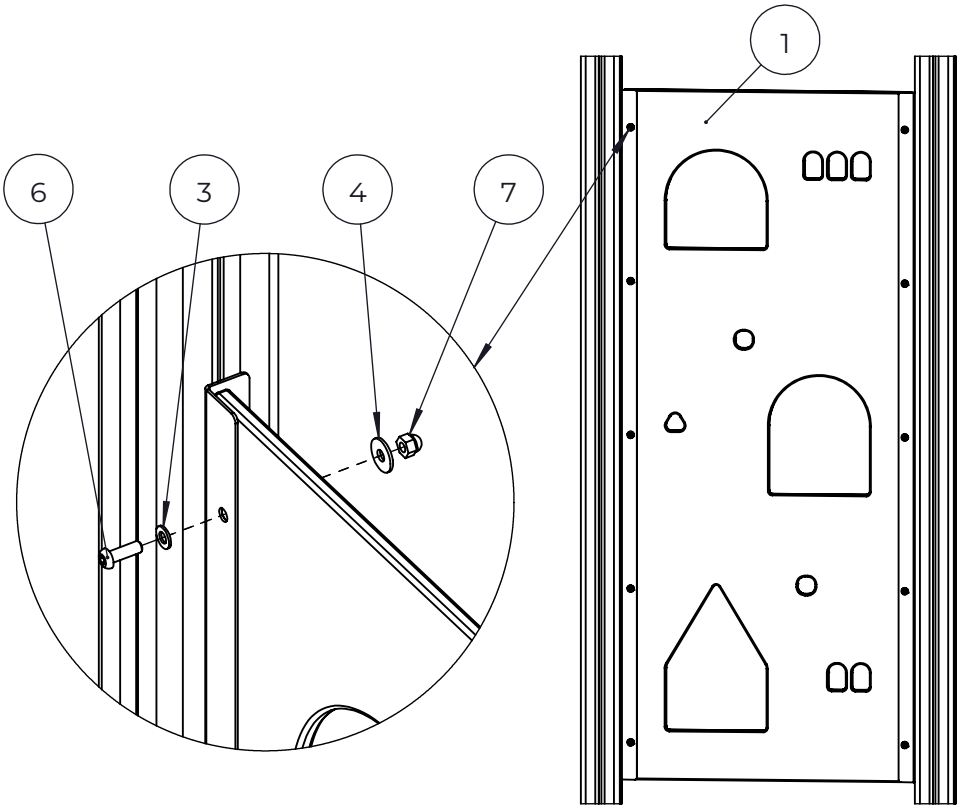

NO.	ITEM CODE			QTY.
1	712537	PLATE	12x686x1660	1
2	915285	FLANGE	2x35/40x1659	2
3	909256	WASHER	Ø16/8.4x1.6	10
4	980152	WASHER	Ø24/8.4x2	10
5	980158	WASHER	Ø12/6,4	10
6	909850	ALLEN SCREW	M8x25	10
7	909633	NUT	M8	10
8	980131	SCREW	Ø6x60	10

Copyright Lappset Group Ltd

712798

Doc.Code: 297334
Rev.: 1.1

DATE: 26.9.2025

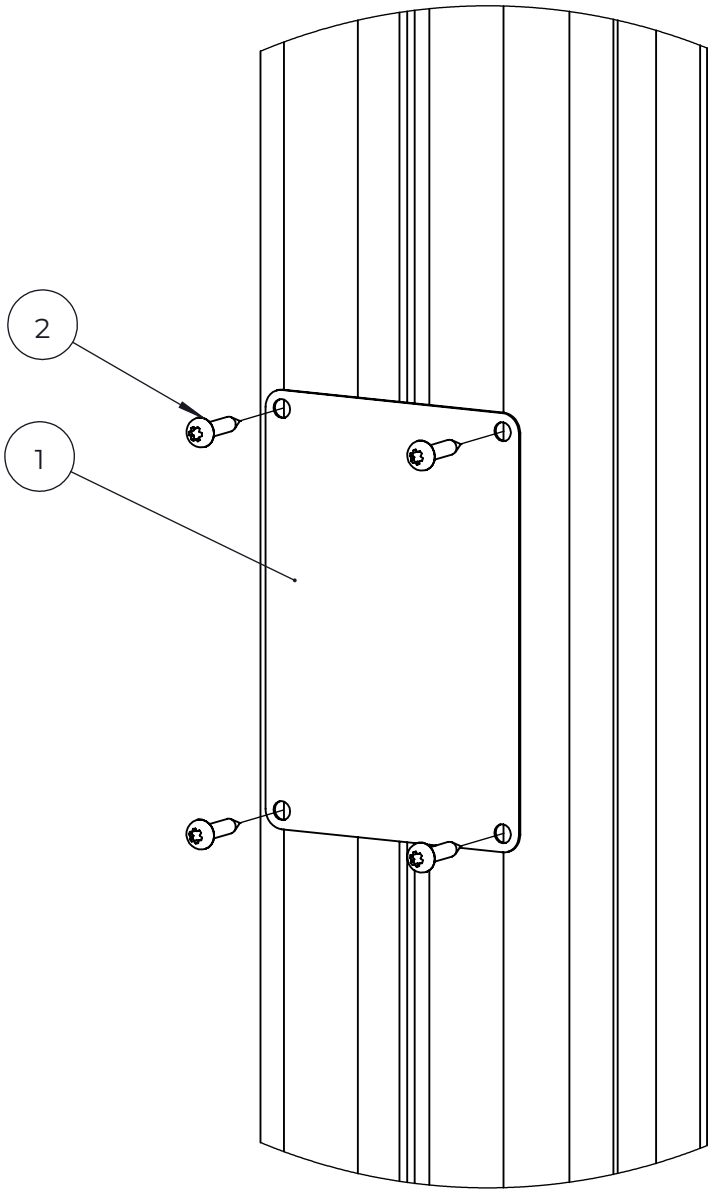

NO.	ITEM CODE			QTY.
1	702339	PRINTED LABEL	118x78	1
2	980114	SCREW	Ø4x20	4

Copyright Lappset Group Ltd

712797

Doc.Code: 297332
Rev.: 1.1

DATE: 26.9.2025

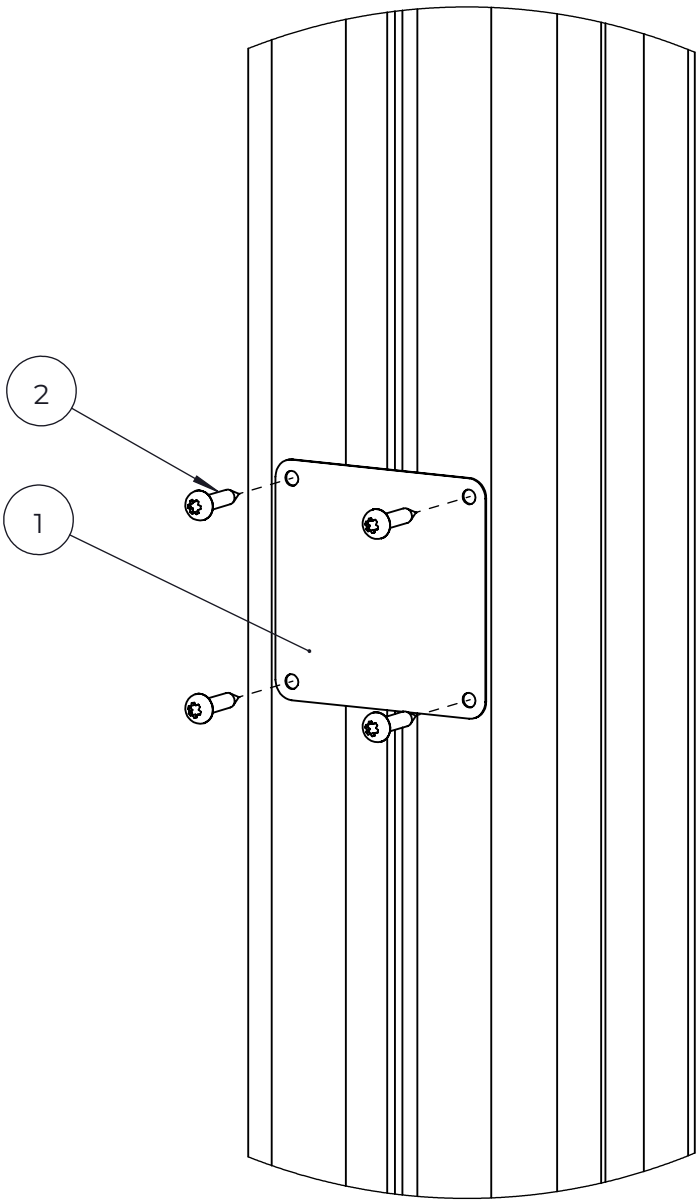

NO.	ITEM CODE			QTY.
1	702286	PRINTED LABEL	65x65	1
2	980114	SCREW	Ø4x20	4

Copyright Lappset Group Ltd

712889

Doc.Code: 296659
Rev.: 1

DATE: 2.7.2025

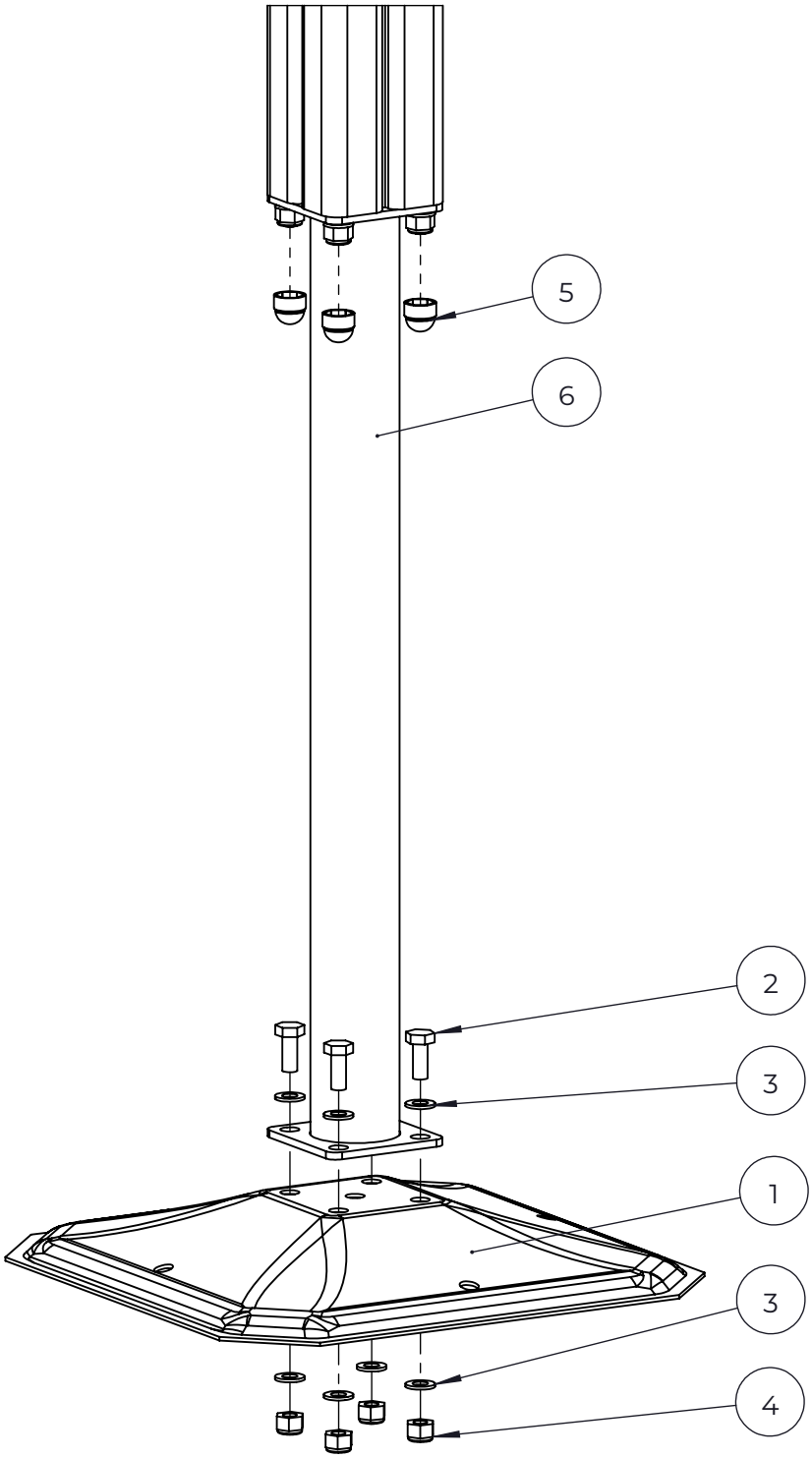

NO.	ITEM CODE			QTY.
1	909519	FOUNDATION PLATE	380 x 380 x 45	1
2	909639	BOLT	M10x25	4
3	909638	WASHER	Ø20 / 10.5	8
4	909637	NUT	M10	4
5	905104	OUTSIDE PLUG	M10	4
6	909511	FOUNDATION TUBE	90x90x650	1

Copyright Lappset Group Ltd

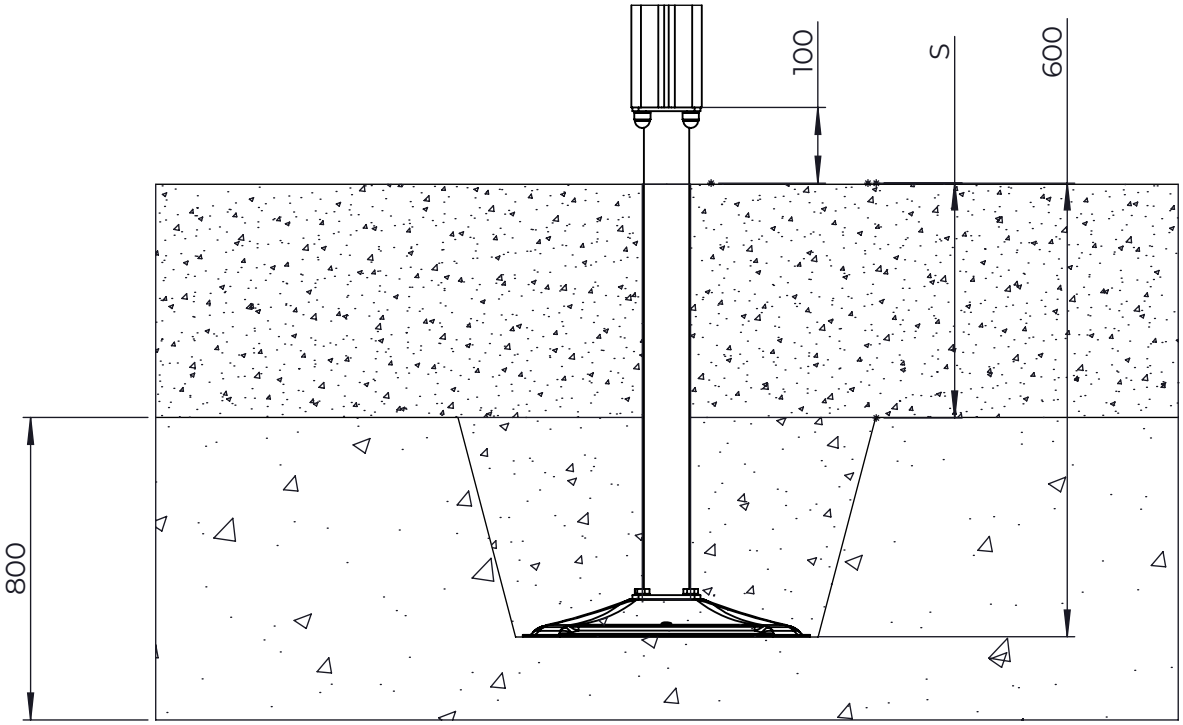

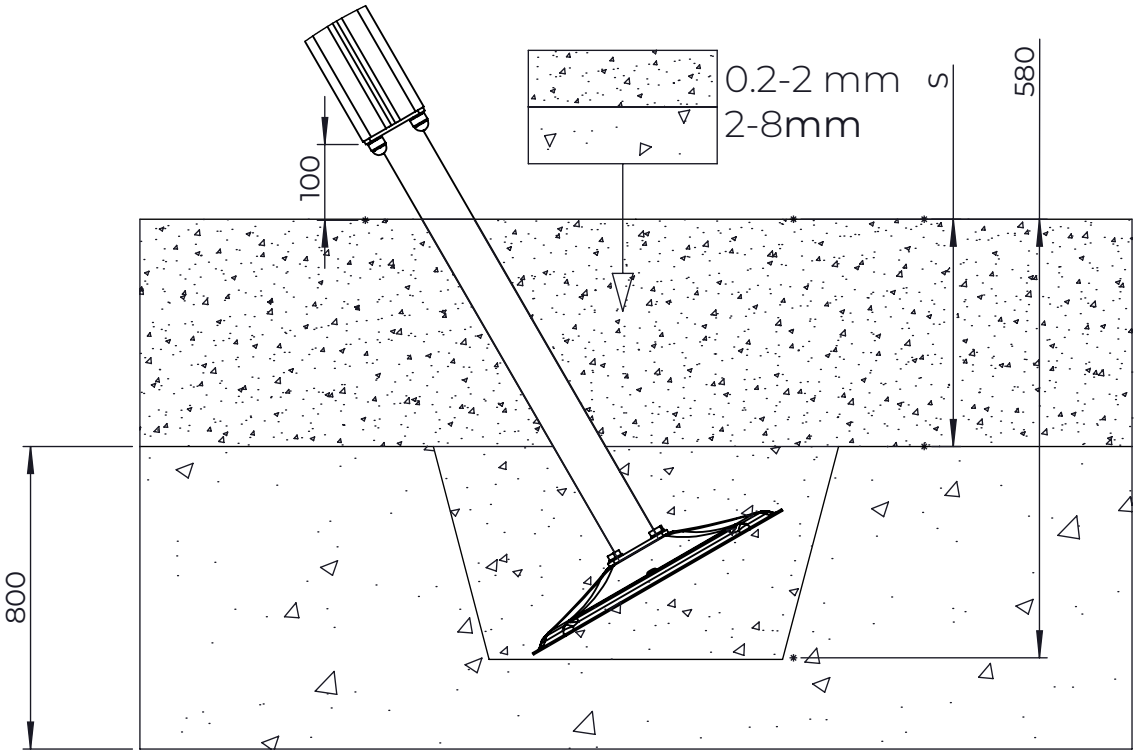

Copyright Lappset Group Ltd

712910

Doc.Code: 309496
Rev.: 1.1

DATE: 13.11.2025

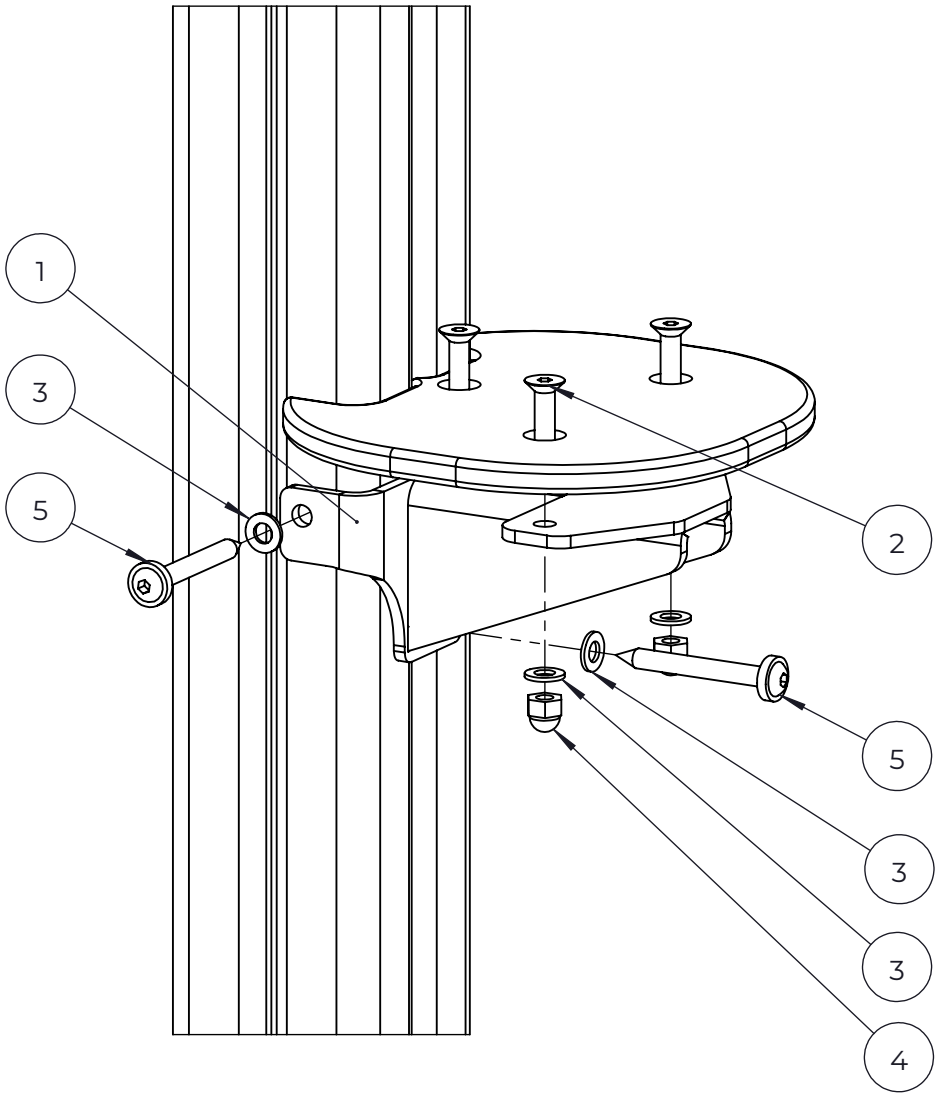

NO.	ITEM CODE			QTY.
1	914408	ATTACHMENT PIECE	75x130x165	1
2	900348	ALLEN SCREW	M8x30	3
3	909256	WASHER	Ø16/8.4x1.6	6
4	909633	NUT	M8	3
5	900240	SPECIAL SCREW	Ø8x70	3

Copyright Lappset Group Ltd

LAPPSET

712824

Doc.Code: 296177
Rev.: 1

DATE: 21.7.2025

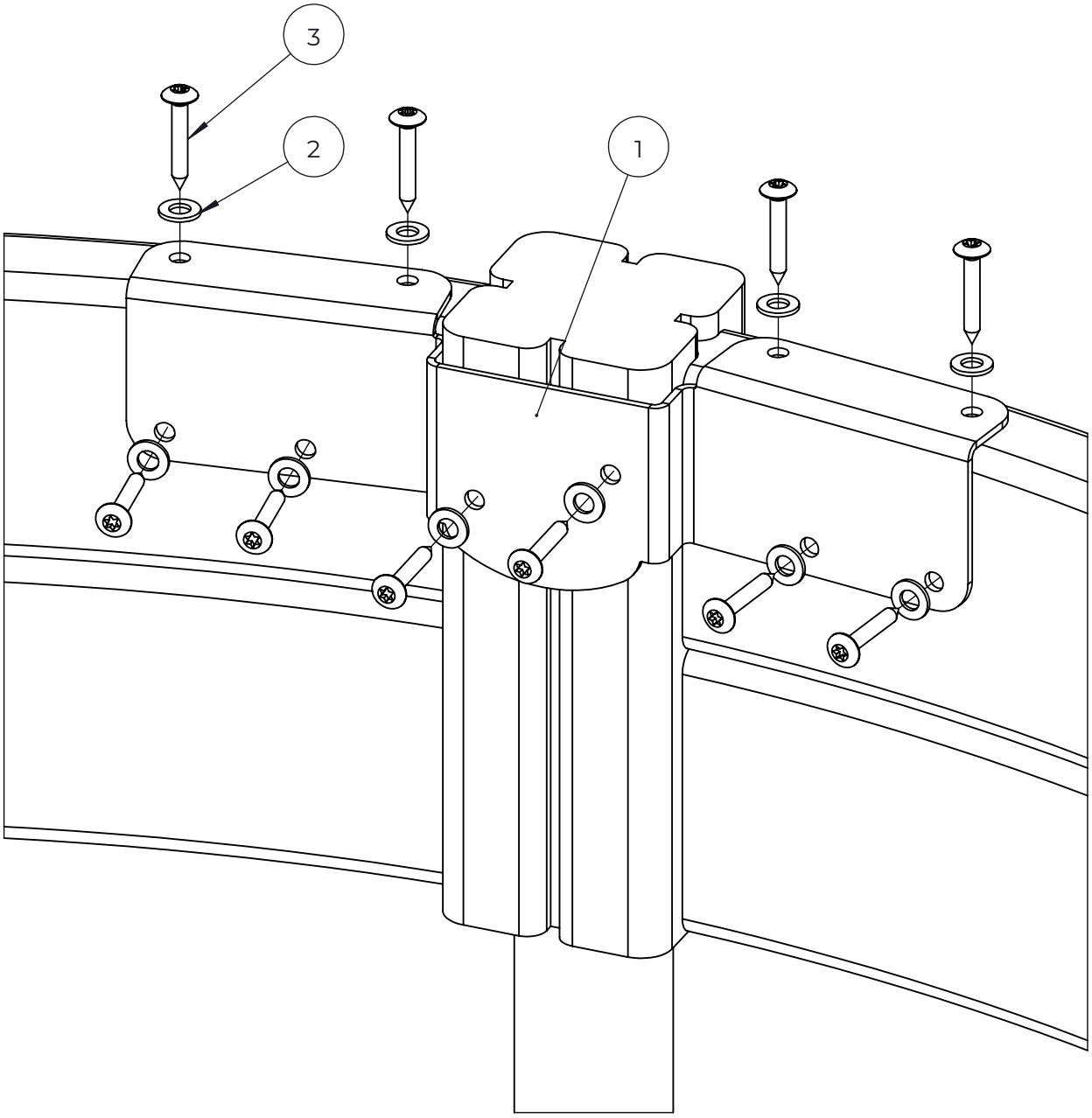

NO.	ITEM CODE			QTY.
1	914349	SUPPORT PIECE	3x92x353	1
2	909256	WASHER	Ø16/8.4x1.6	10
3	980128	SPECIAL SCREW	Ø7x40	10

Copyright Lappset Group Ltd

712747

Doc.Code: 297354
Rev.: 1

DATE: 21.7.2025

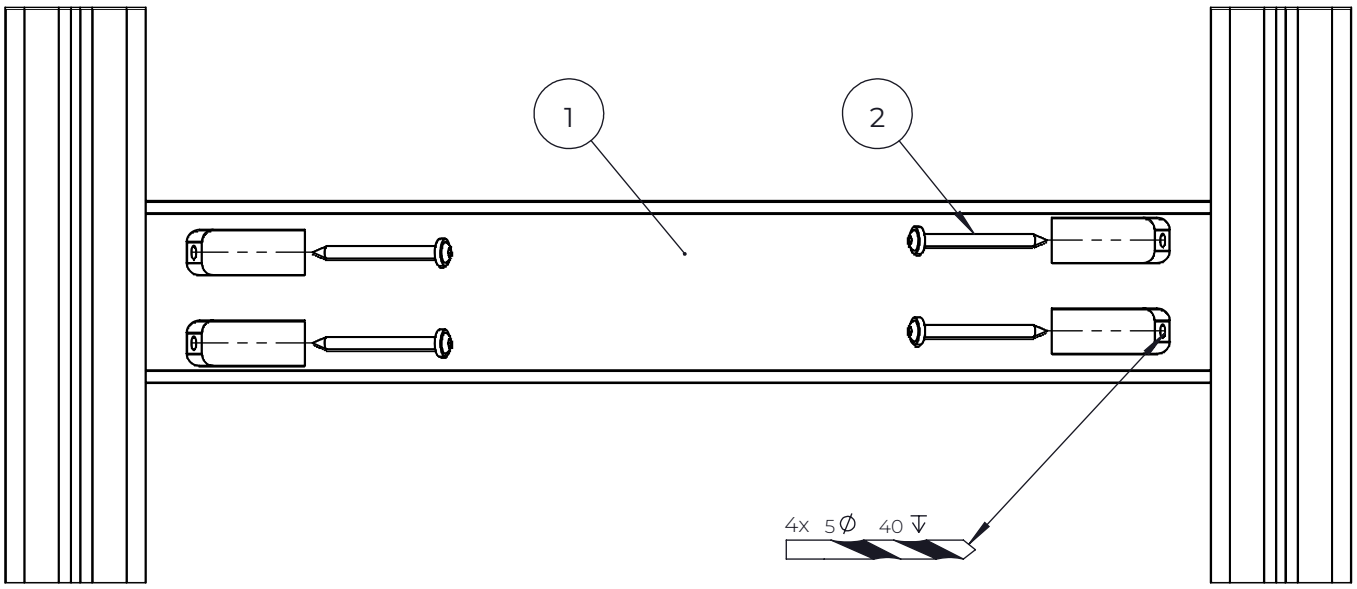

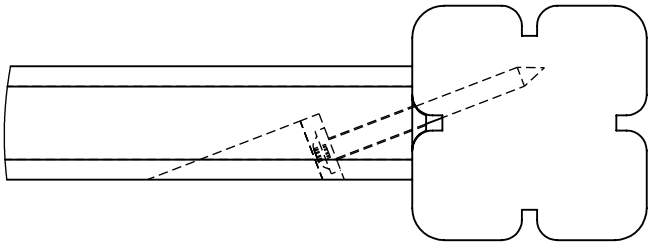

NO.	ITEM CODE			QTY.
1	712079	BOOM	45x120x715	1
2	903093	SPECIAL SCREW	Ø8x90	4

Copyright Lappset Group Ltd

712926

Doc.Code: 309747
Rev.: 1

DATE: 18.11.2025

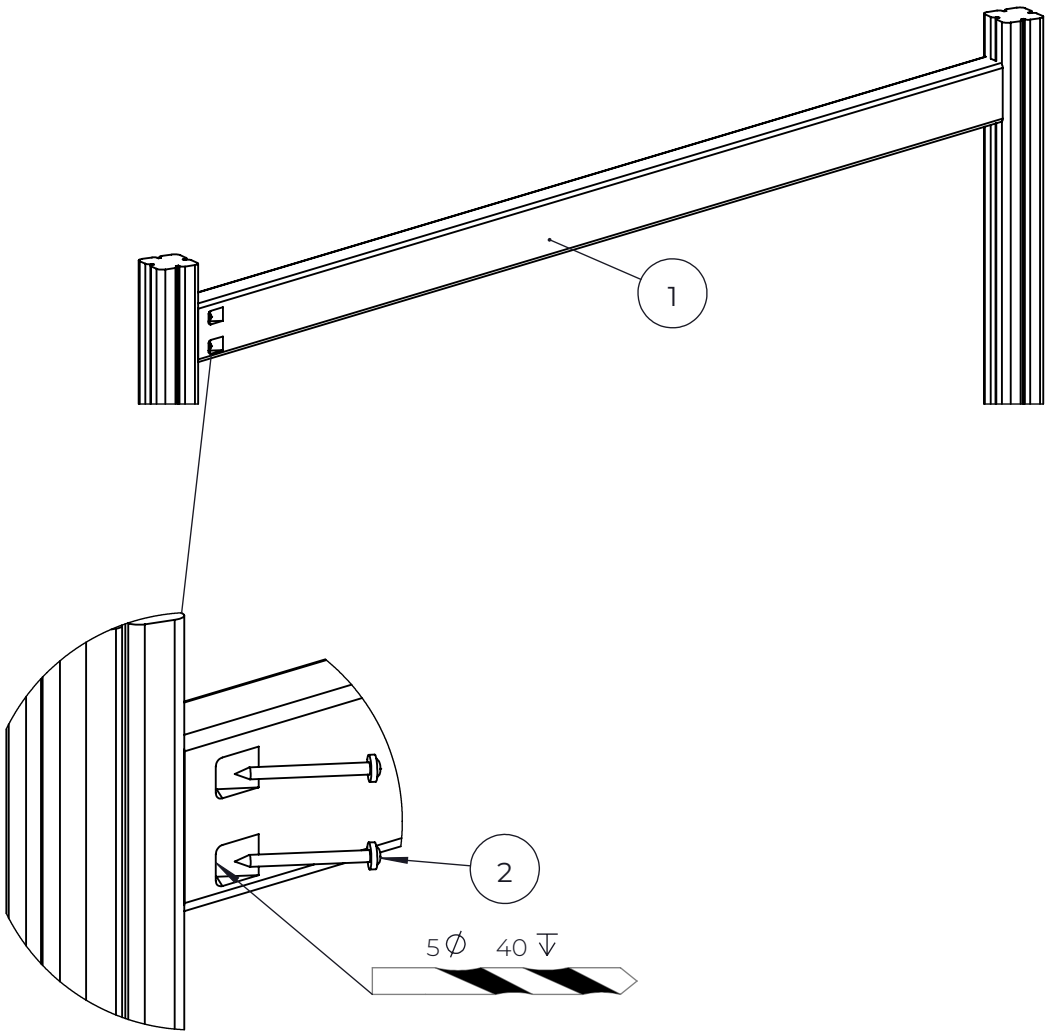

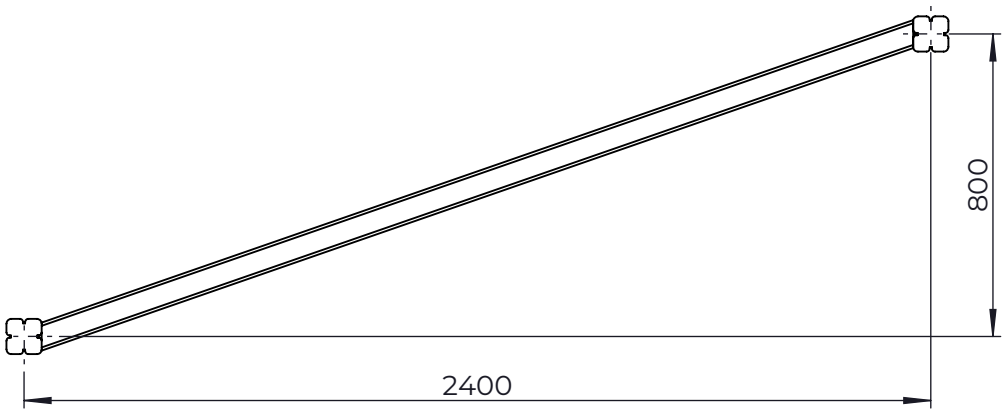

NO.	ITEM CODE			QTY.
1	707502	BOOM	70x120x2464	1
2	903093	SPECIAL SCREW	Ø8x90	4

Copyright Lappset Group Ltd

712819

Doc.Code: 297763
Rev.: 1.1

DATE: 31.8.2026

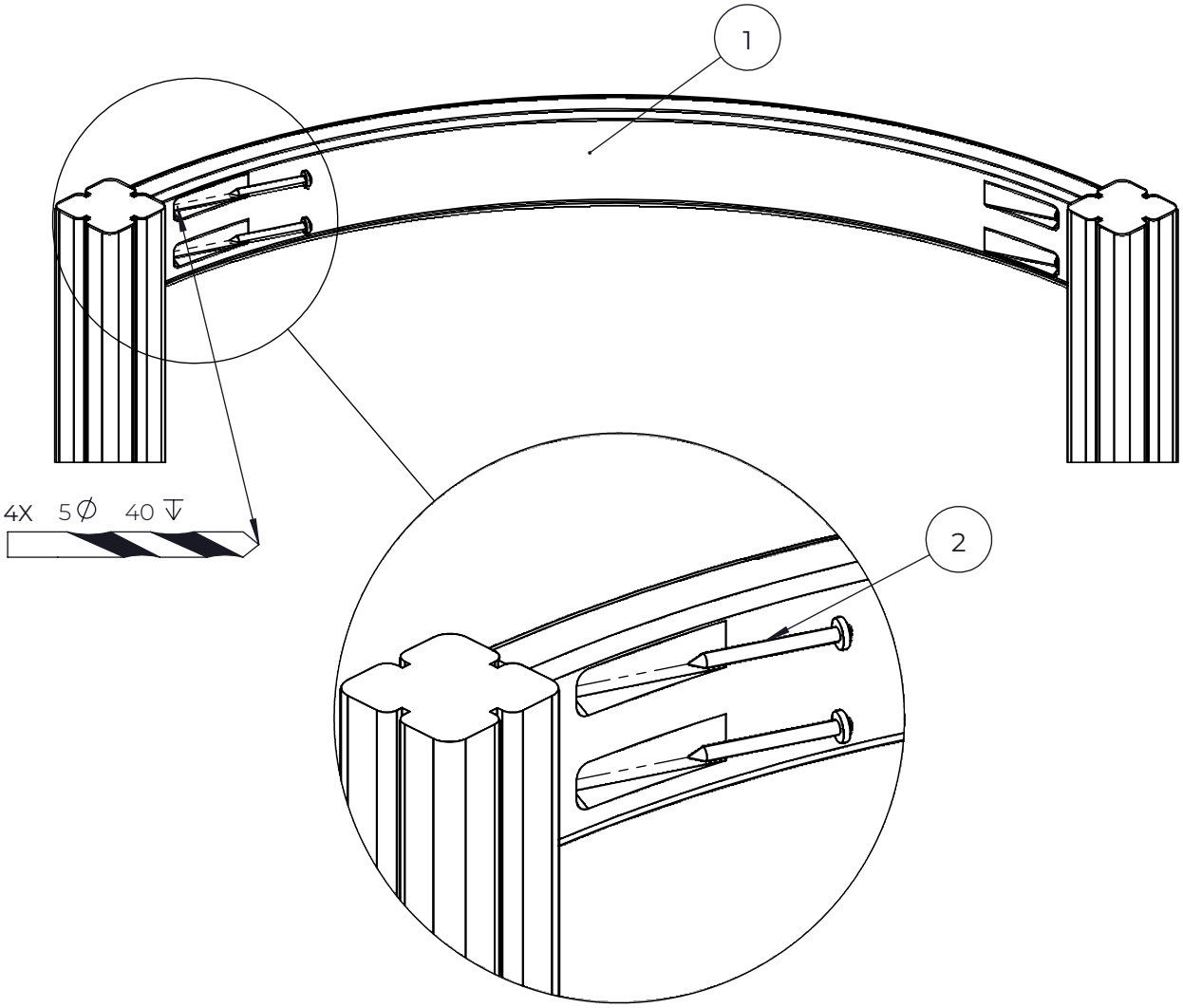

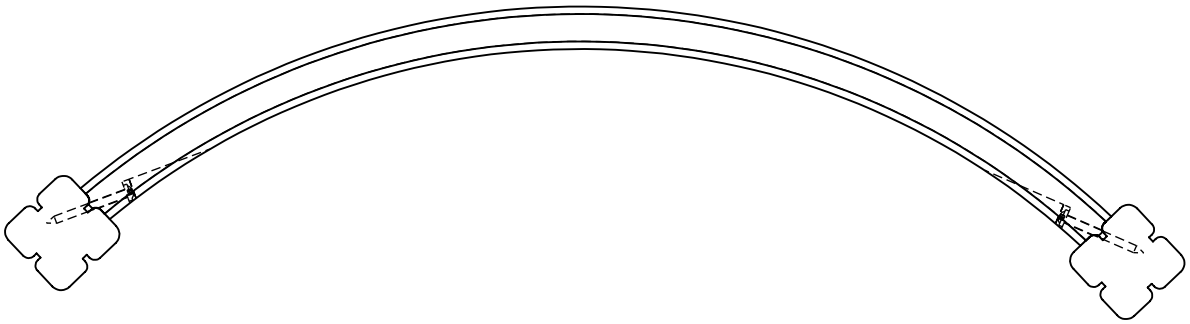

NO.	ITEM CODE			QTY.
1	711718-001	ARCH ELEMENT	45x120x1091	1
2	903093	SPECIAL SCREW	Ø8x90	4

Copyright Lappset Group Ltd