LAPPSET®

PRIME

ASENNUSOHJE
MONTERINGSANSVISNING
INSTALLATION INSTRUCTION
AUFBAUANLEITUNG
NOTICE D'INSTALLATION

DATE: 17.11.2025

F24303M

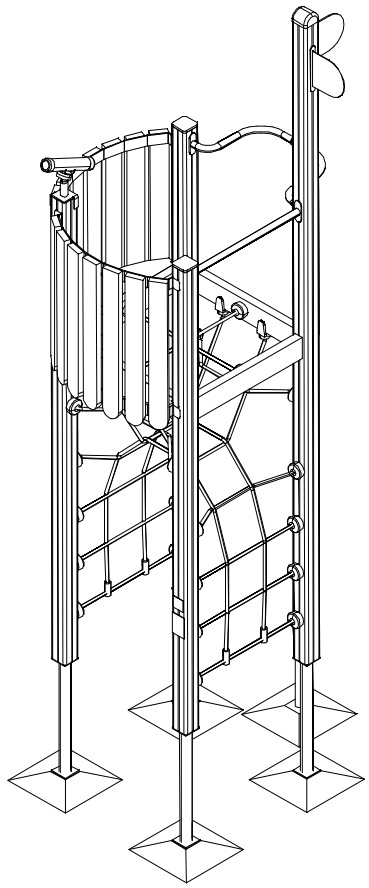

Copyright Lappset Group Ltd

LAPPSET®

PRIME

F24303M

DATE: 17.11.2025

701606	PCS	712042	PCS	712052	PCS	712517	PCS	712679	PCS	712747	PCS
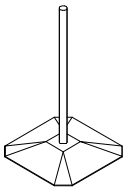	1	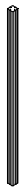	3		1	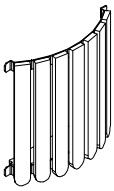	2		1	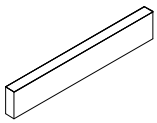	4
L 700		L 2650		L 3650				+1970		L 704	

712751	PCS	712760	PCS	712780	PCS	712788	PCS	712797	PCS	712798	PCS
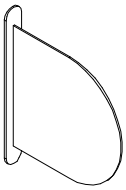	2	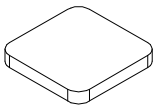	2	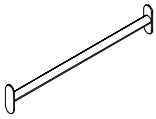	1	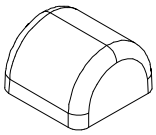	1		1	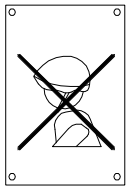	1
				L 704							

712817	PCS	712871	PCS	712884	PCS	712889	PCS		PCS		PCS
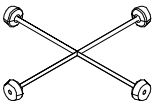	1	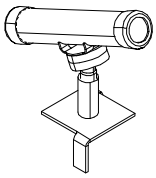	1	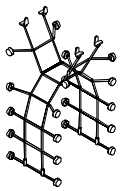	1	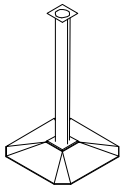	4				
						L 700					

	PCS		PCS		PCS		PCS		PCS		PCS

	PCS		PCS		PCS		PCS		PCS		PCS

	PCS		PCS		PCS		PCS		PCS		PCS

	PCS		PCS		PCS		PCS		PCS		PCS

Copyright Lappset Group Ltd

LAPPSET PRIME

F24303M

DATE: 17.11.2025

EN/AS Impact Area 21 m2

Falling Space 21 m2

Grid size = 500 mm

1:50

0 2

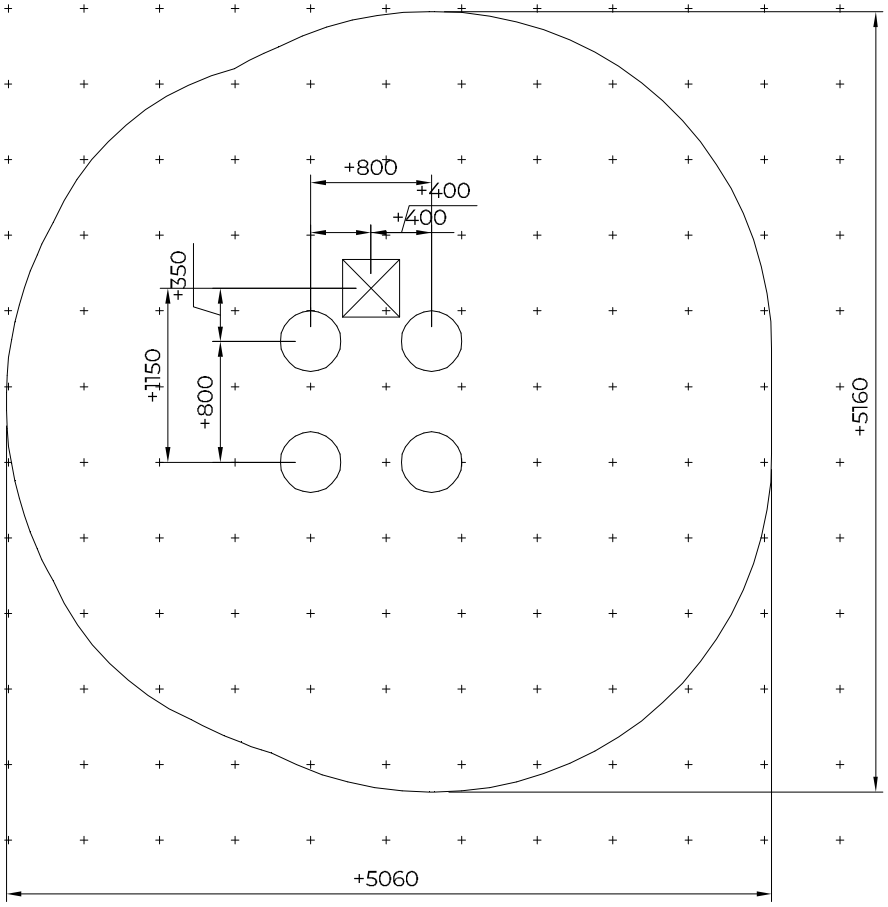

Copyright Lappset Group Ltd

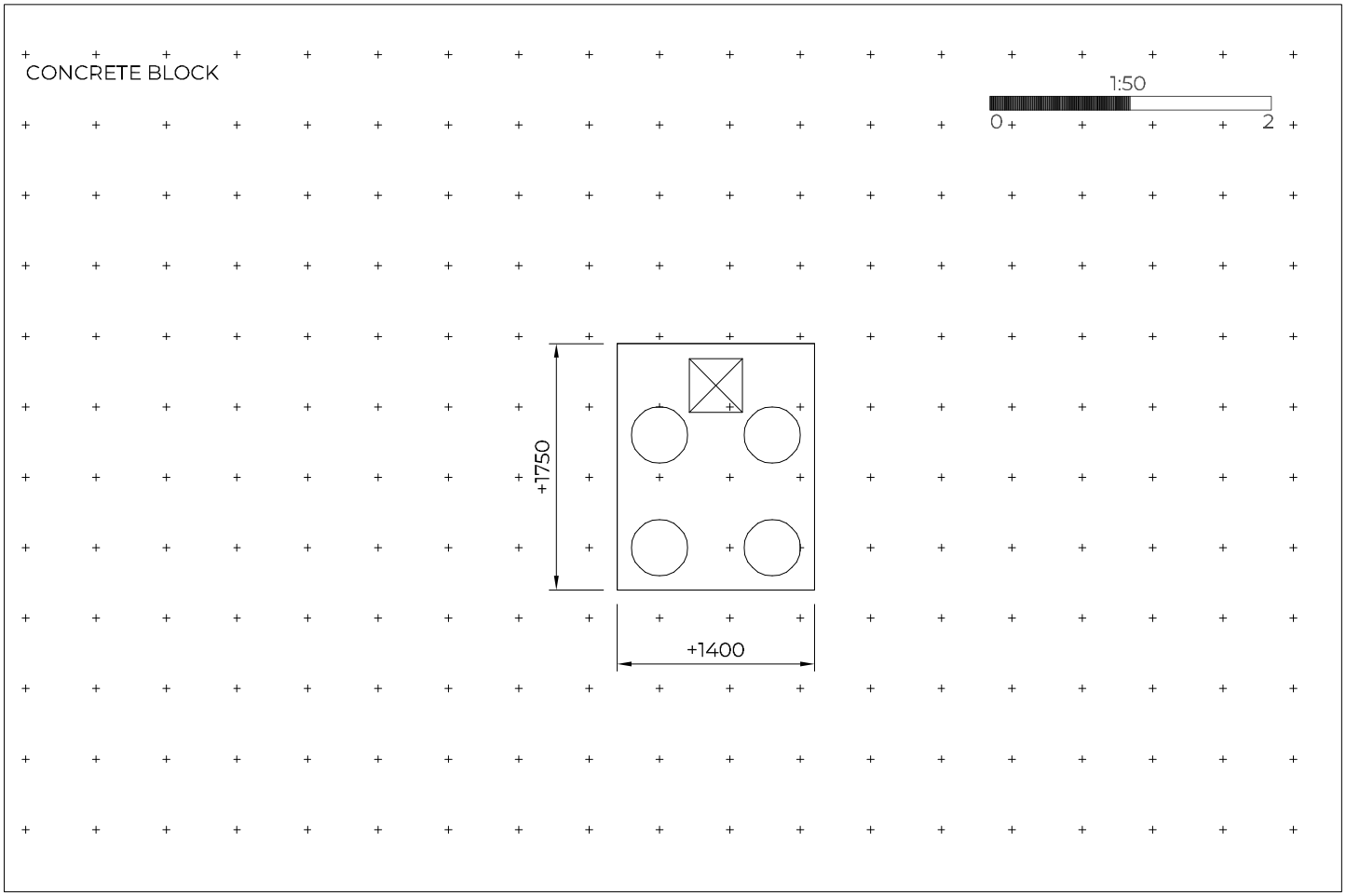
CONCRETE BLOCK
1:50
0
2
+1750
+1400

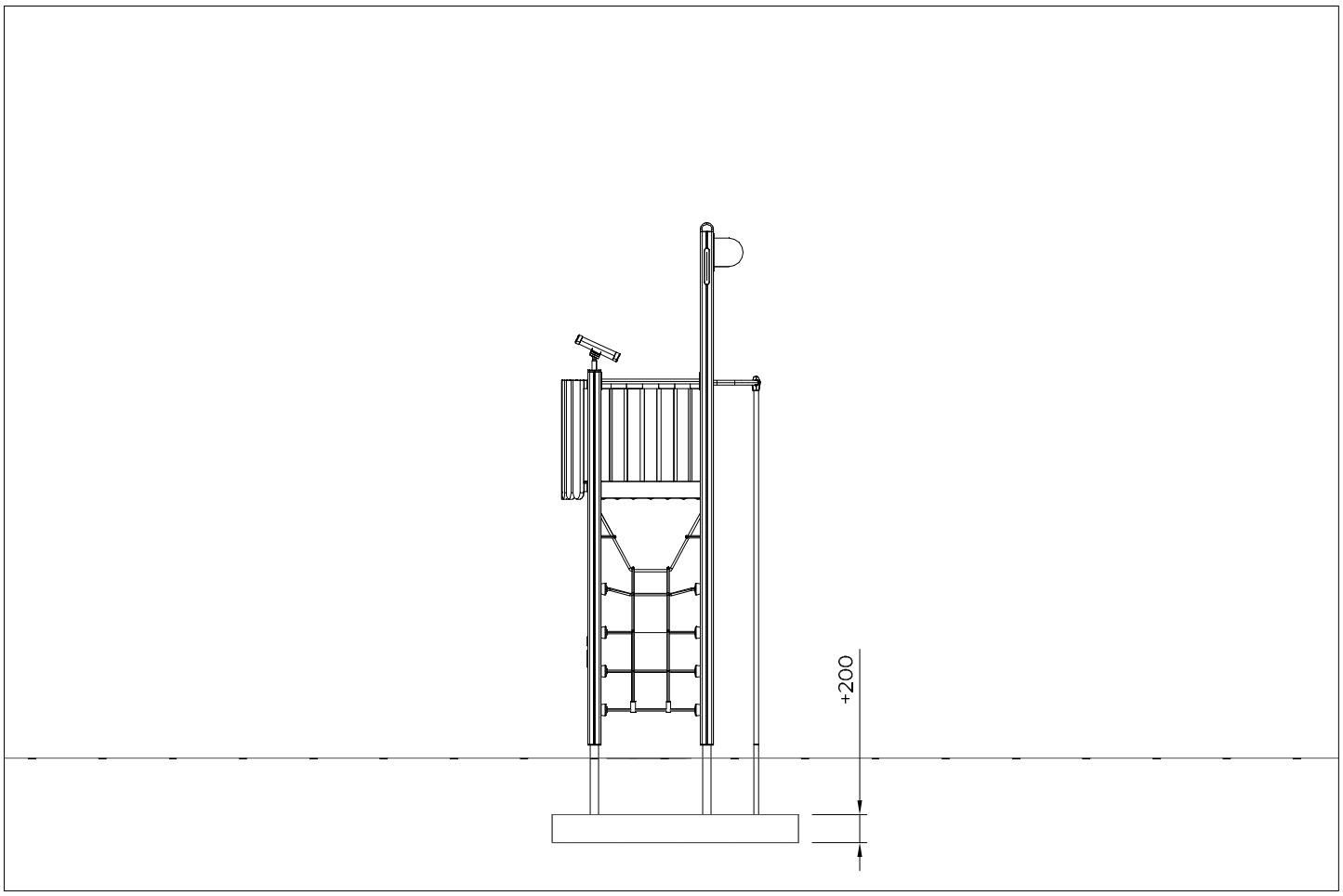
+200

LAPPSET PRIME

F24303M

DATE: 17.11.2025

EN/AS Impact Area 21 m2

Falling Space 21 m2

Max Falling Height 1970 mm

1:50

0 2

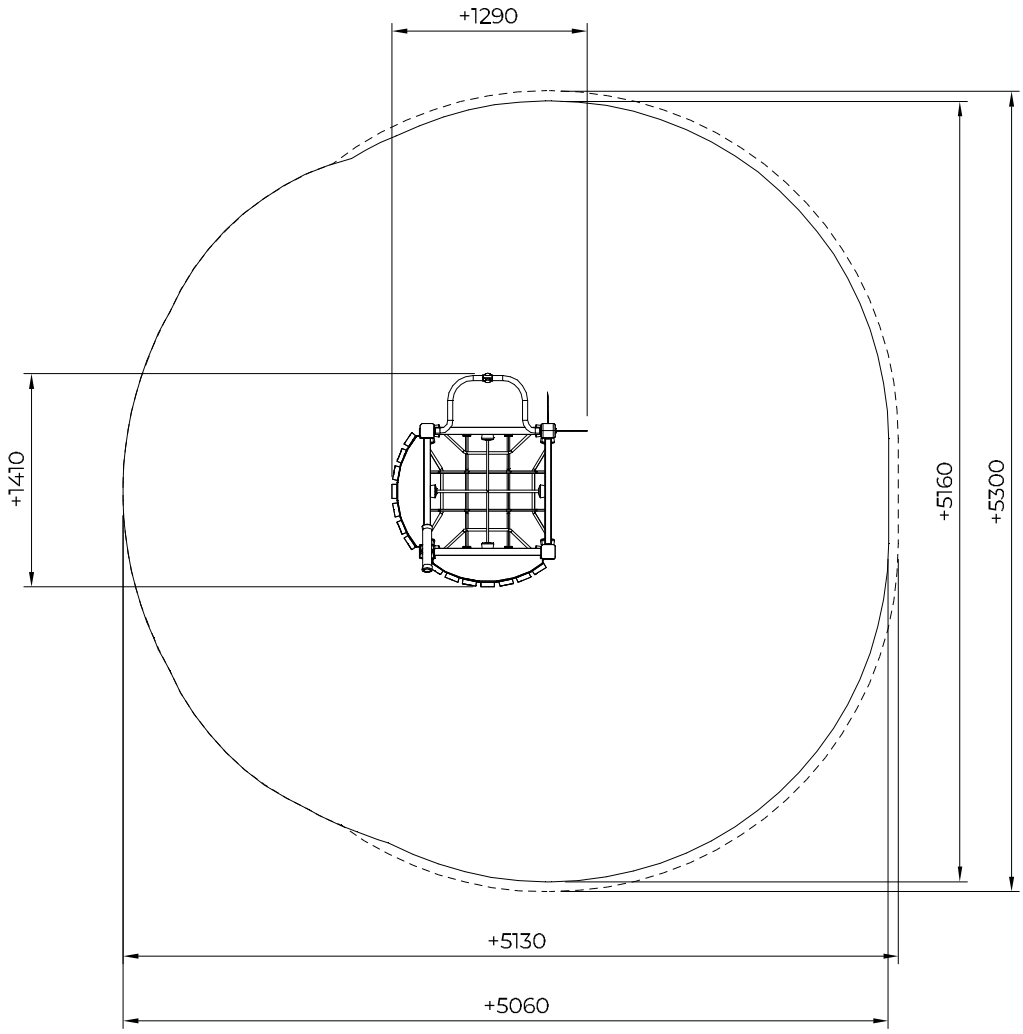

Copyright Lappset Group Ltd

LAPPSET
PRIME

F24303M

DATE: 17.11.2025

5.1

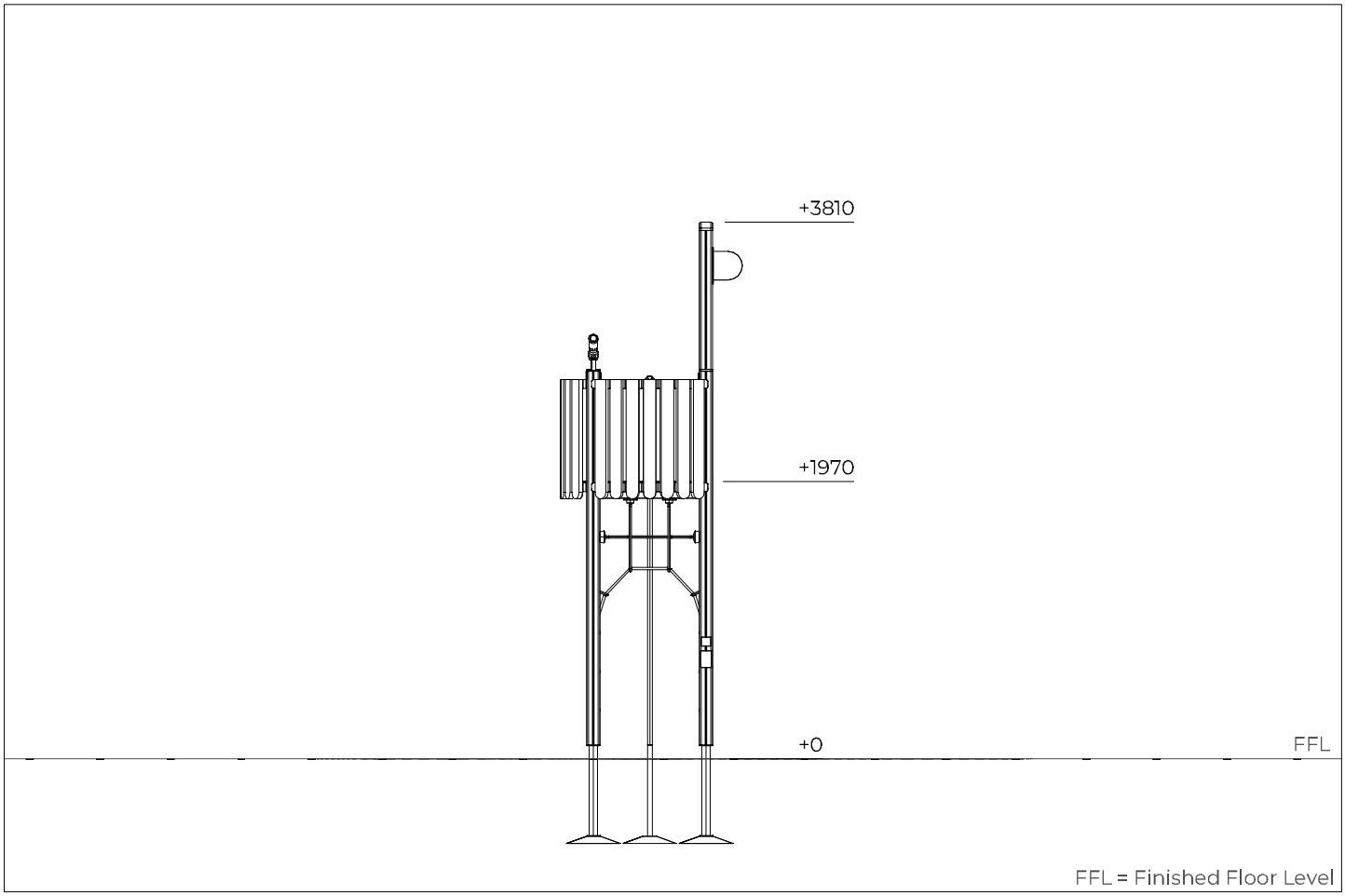

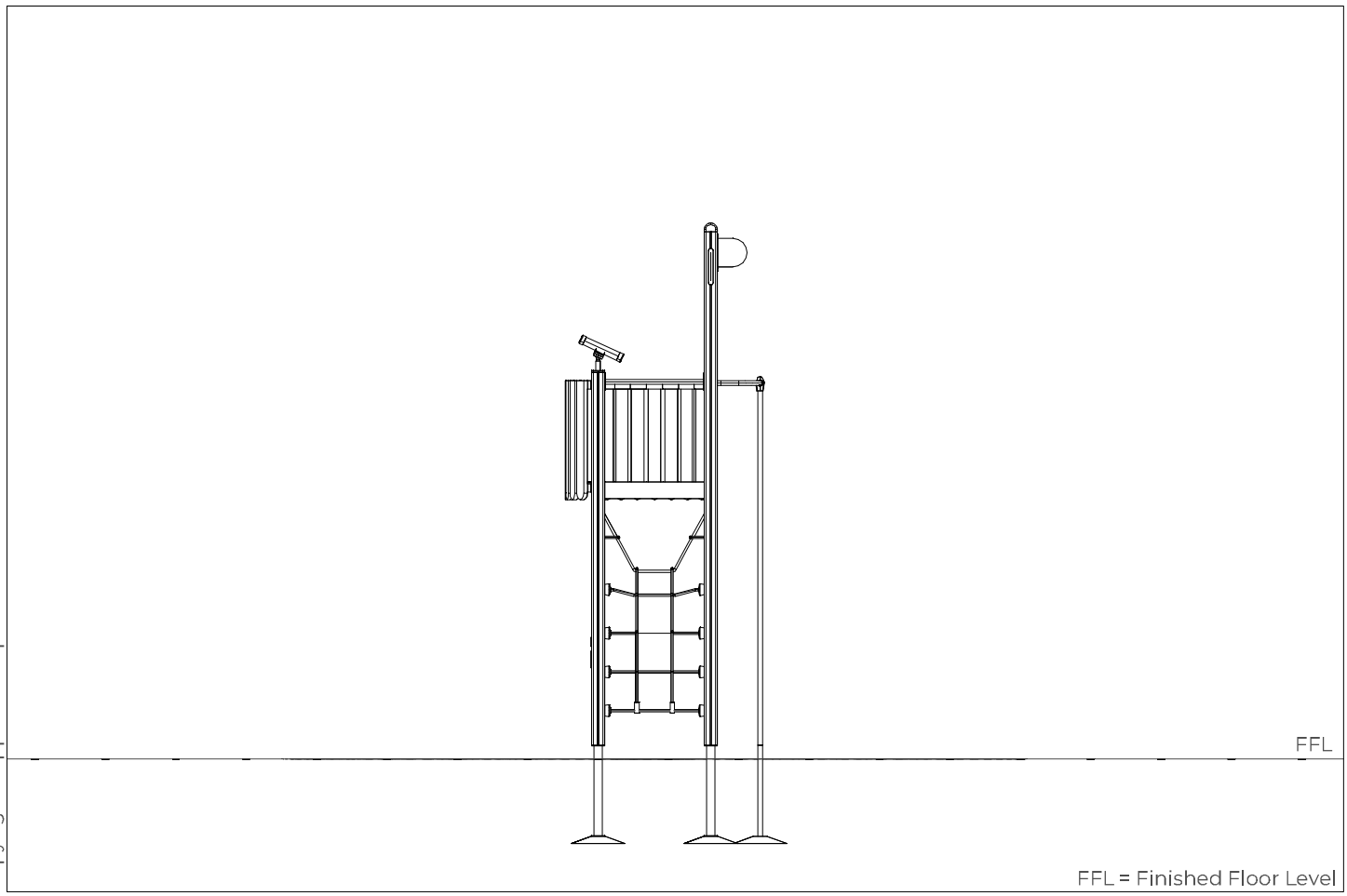

Copyright Lappset Group Ltd

LAPPSET
PRIME

F24303M

DATE: 17.11.2025

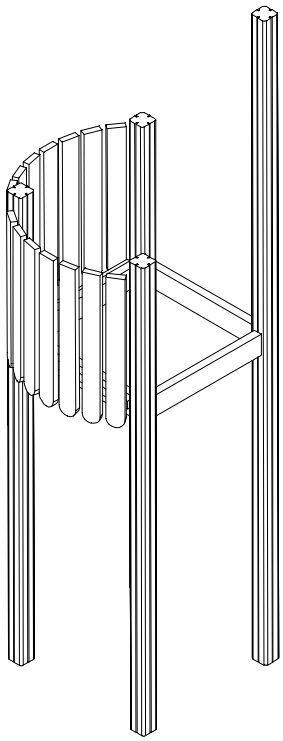

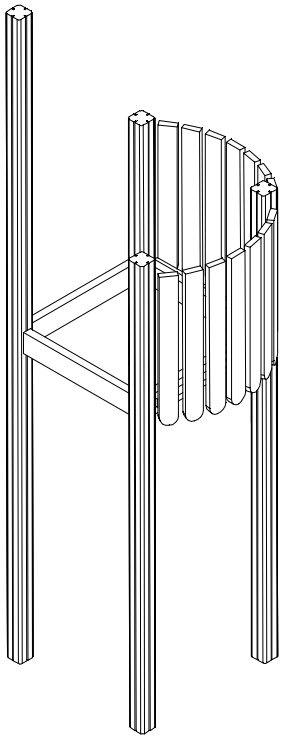

Copyright Lappset Group Ltd

LAPPSET
PRIME

F24303M

DATE: 17.11.2025

TOWER A

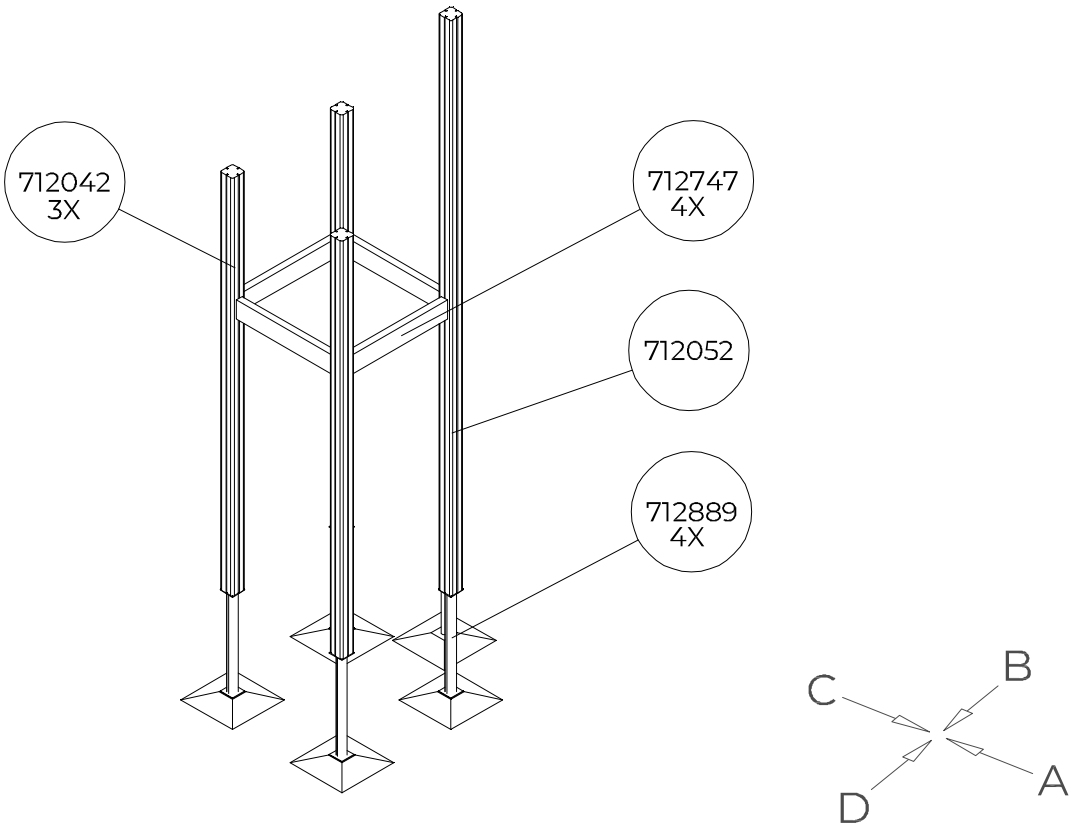

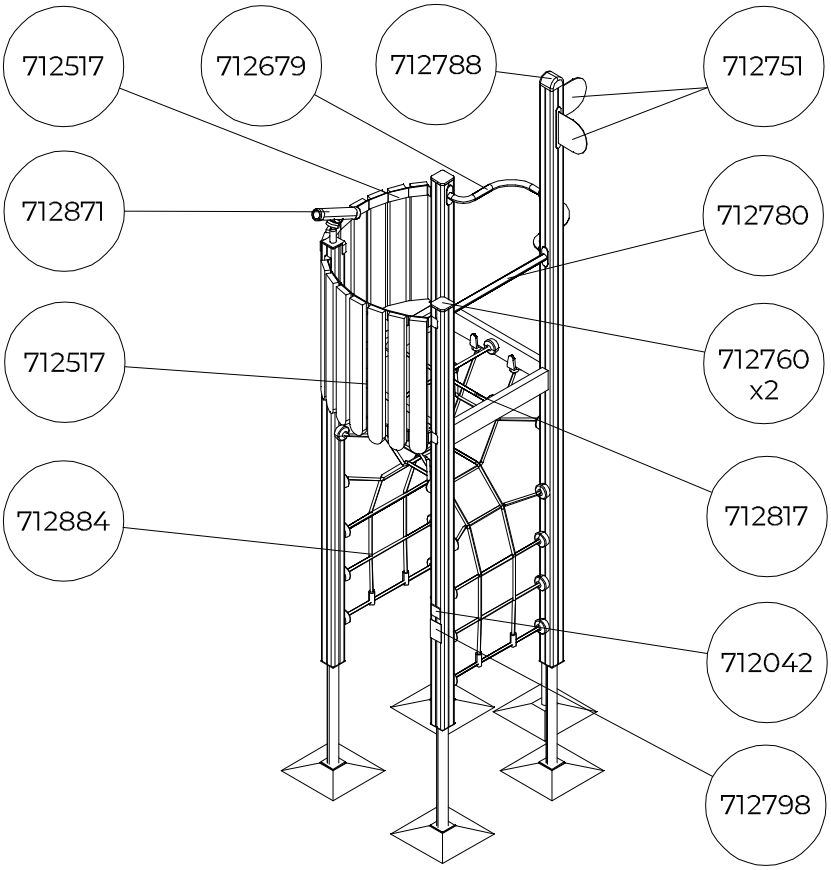

Copyright Lappset Group Ltd

LAPPSET PRIME

F24303M

DATE: 17.11.2025

TOWER A
7.1

1:50

A

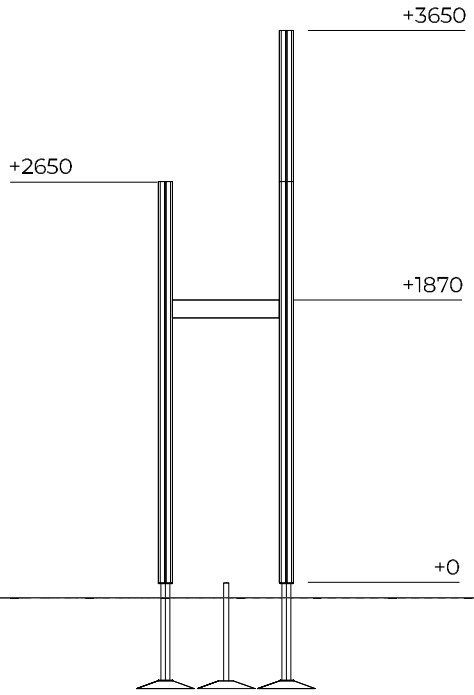

B

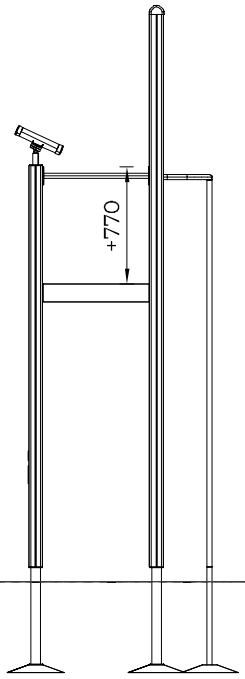

C

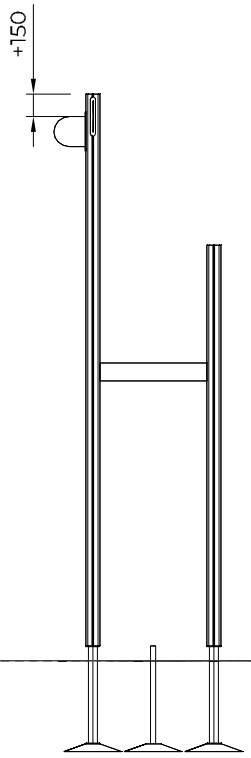

D

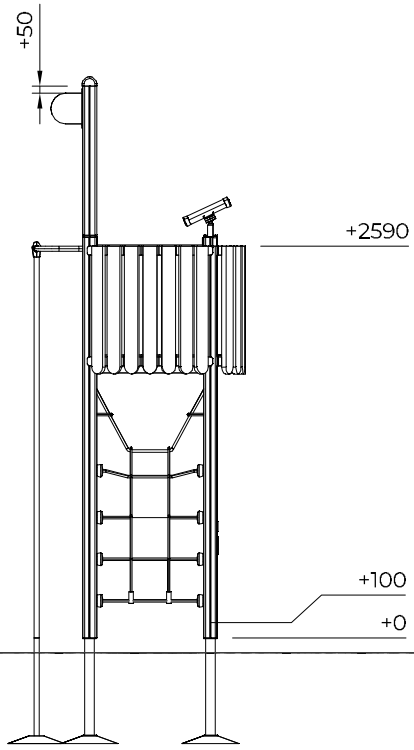

Copyright Lappset Group Ltd

LAPPSET

PRIME

F24303M

DATE: 15.10..2025

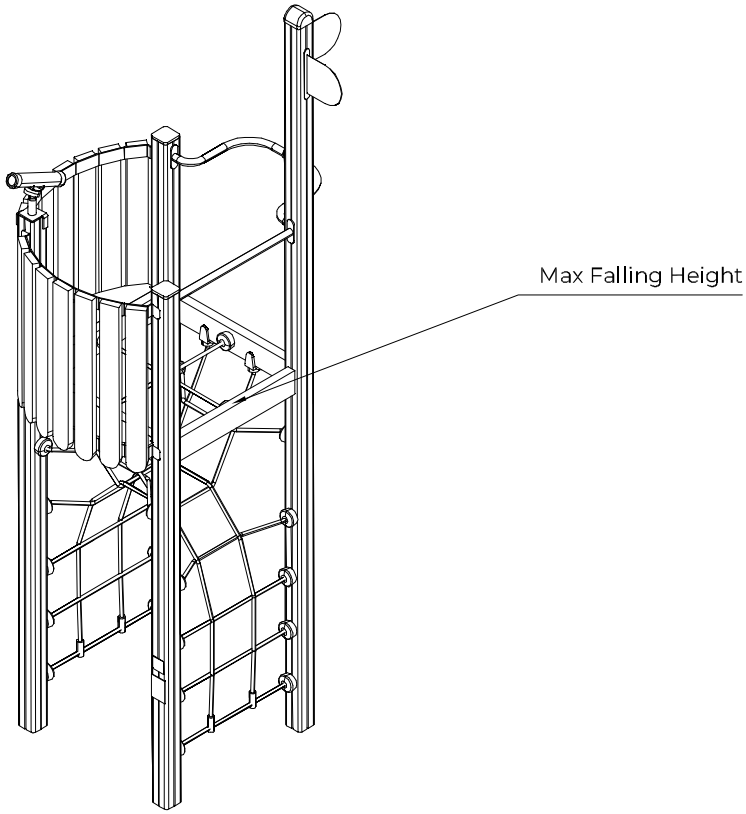

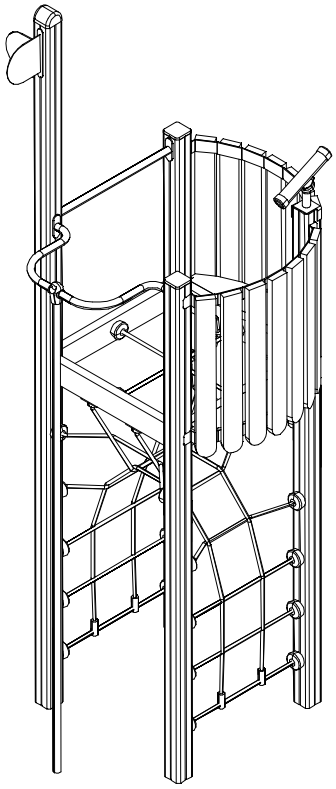

Copyright Lappset Group Ltd

712871

Doc.Code: 295790
Rev.: 1.1

DATE: 29.9.2025

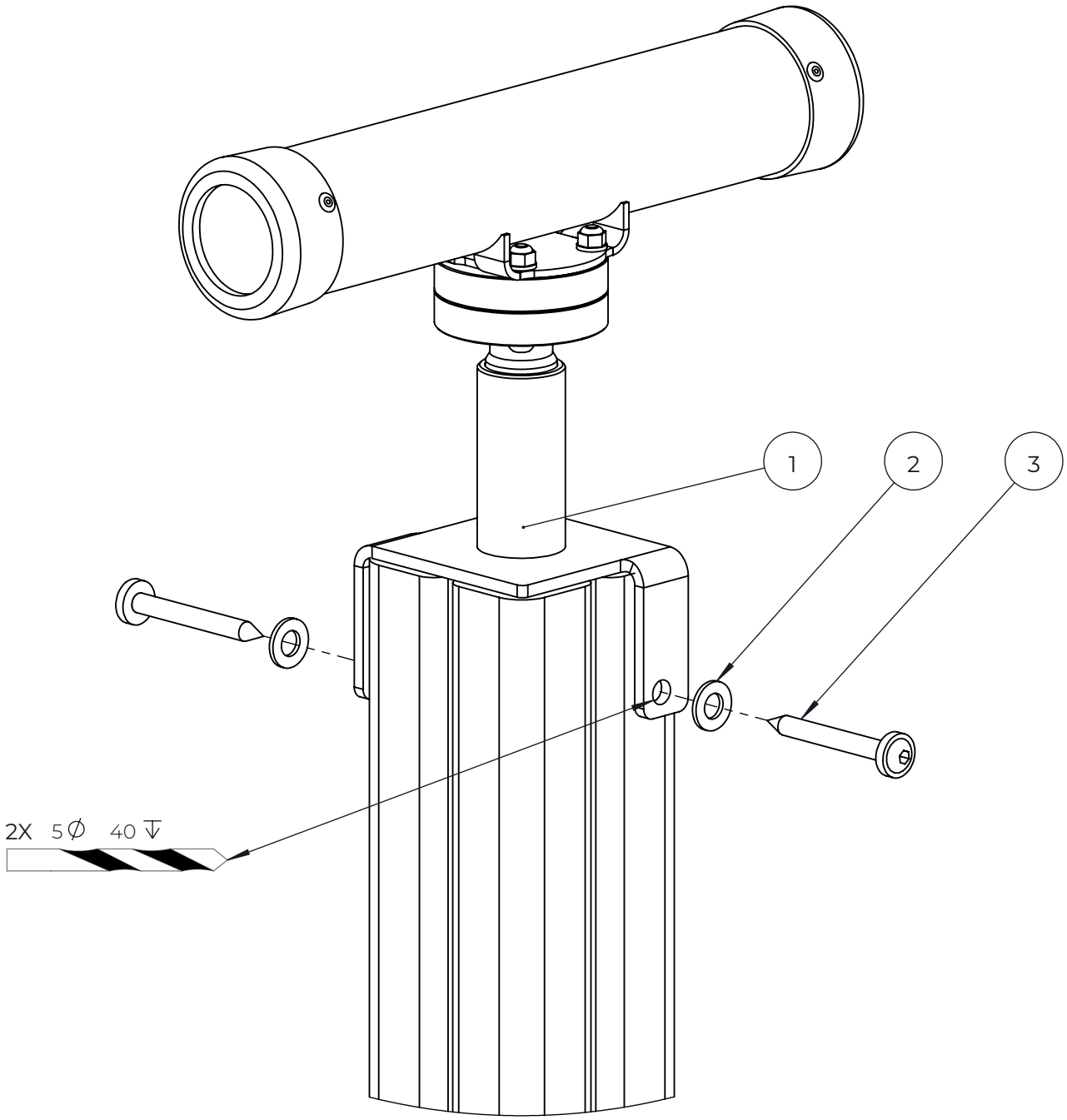

NO.	ITEM CODE			QTY.
1	707304	TELESCOPE		1
2	901302	WASHER	Ø20/10.5x2	2
3	900240	SPECIAL SCREW	Ø8x70	2

Copyright Lappset Group Ltd

712751

Doc.Code: 294014
Rev.: 1.1

DATE: 26.9.2025

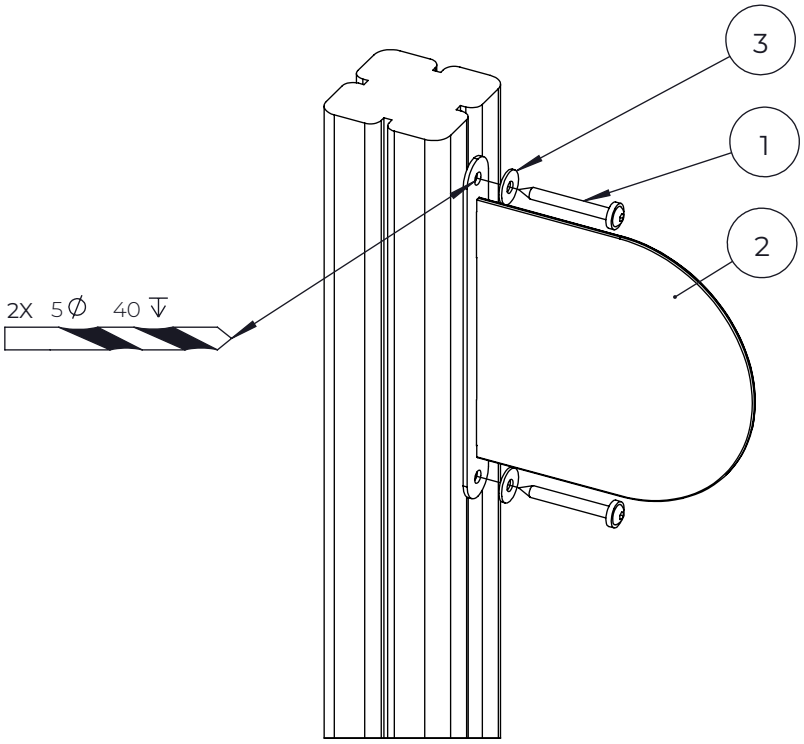

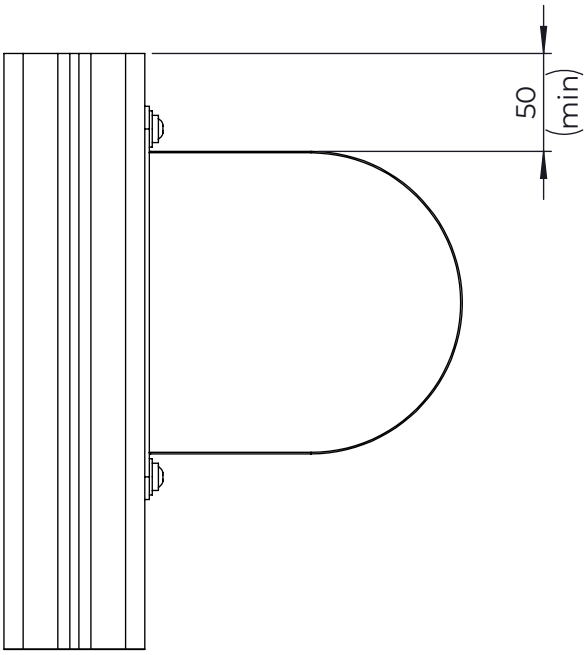

NO.	ITEM CODE			QTY.
1	900240	SPECIAL SCREW	Ø8x70	2
2	914264	STREAMER	30x217x260	1
3	980152	WASHER	Ø24/8.4x2	2

Copyright Lappset Group Ltd

712760

Doc.Code: 294065
Rev.: 1.3

DATE: 23.3.2026

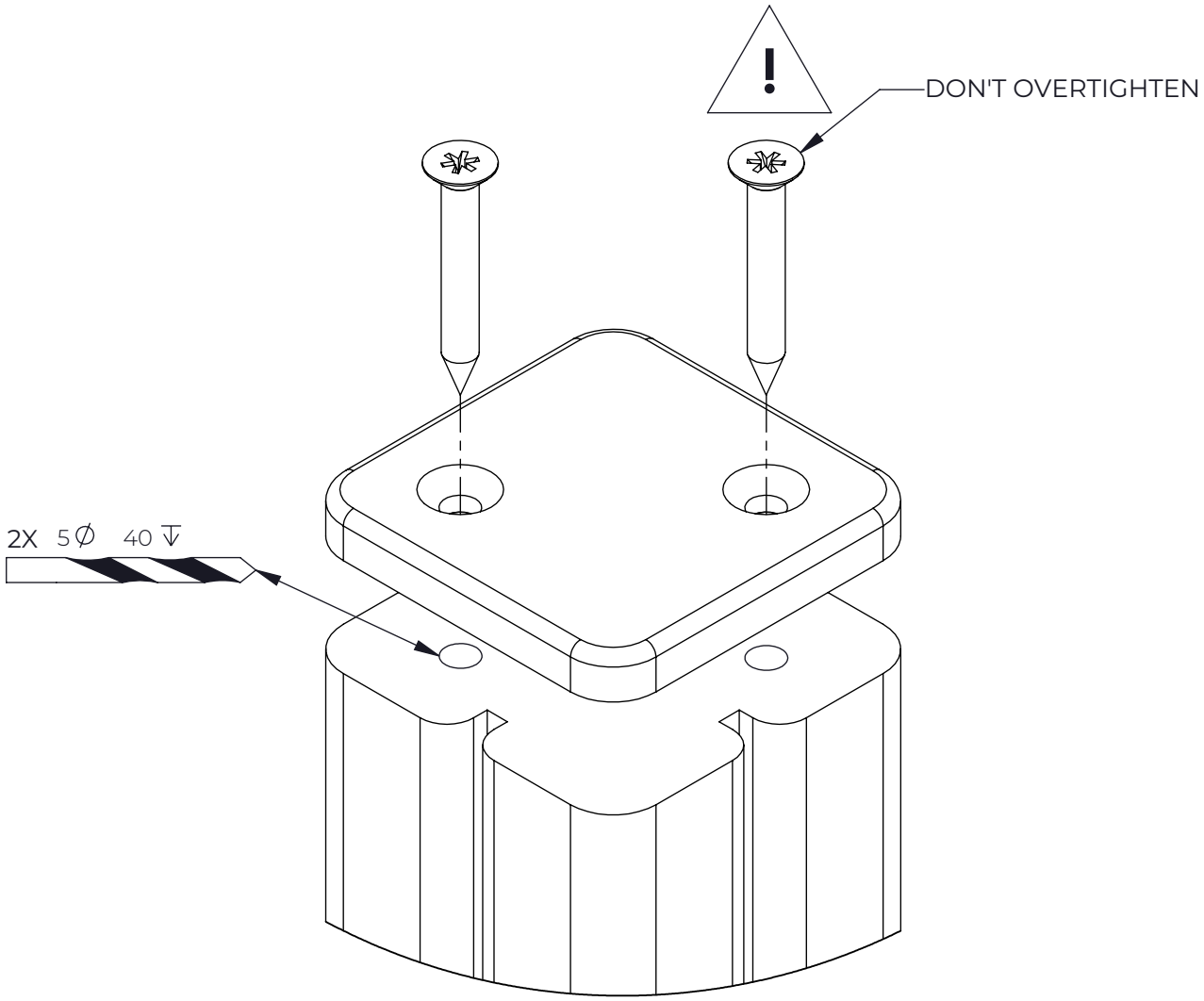

NO.	ITEM CODE			QTY.
1	906630	SCREW	Ø8x60	2
2	711807	TOP HAT	93x93x12	1

Copyright Lappset Group Ltd

712788

Doc.Code: 308064
Rev.: 2.1

DATE: 7.11.2025

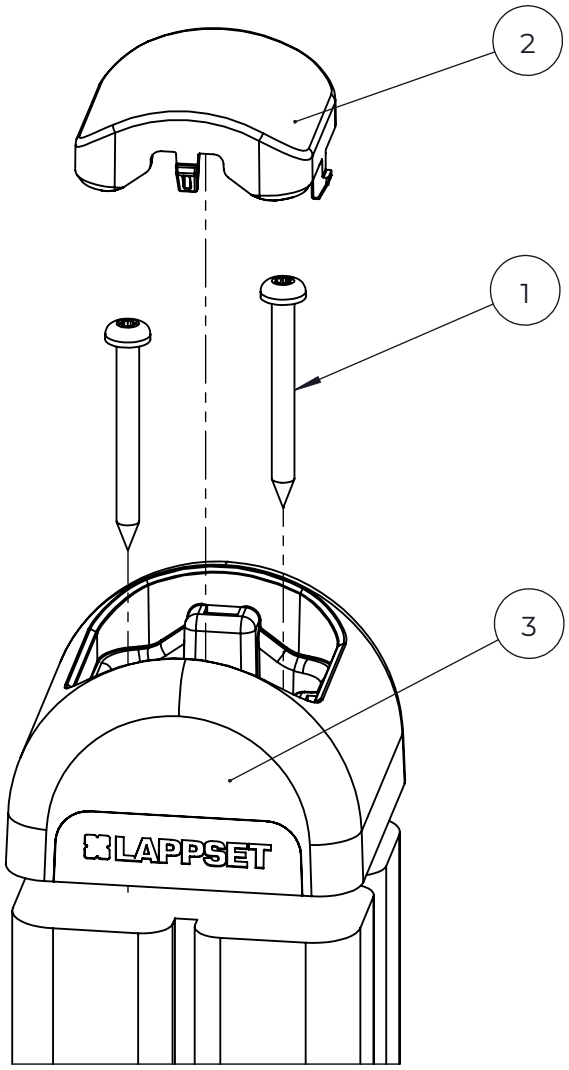

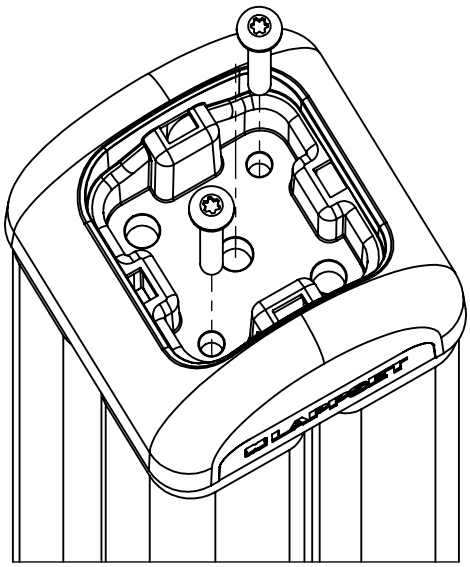

NO.	ITEM CODE			QTY.
1	980131	SCREW	Ø6x60	2
2	915379	TOP HAT COVER	67,5x67,6x34	1
3	915378	TOP HAT BASE	95x95x60	1

Copyright Lappset Group Ltd

712797

Doc.Code: 297332
Rev.: 1.1

DATE: 26.9.2025

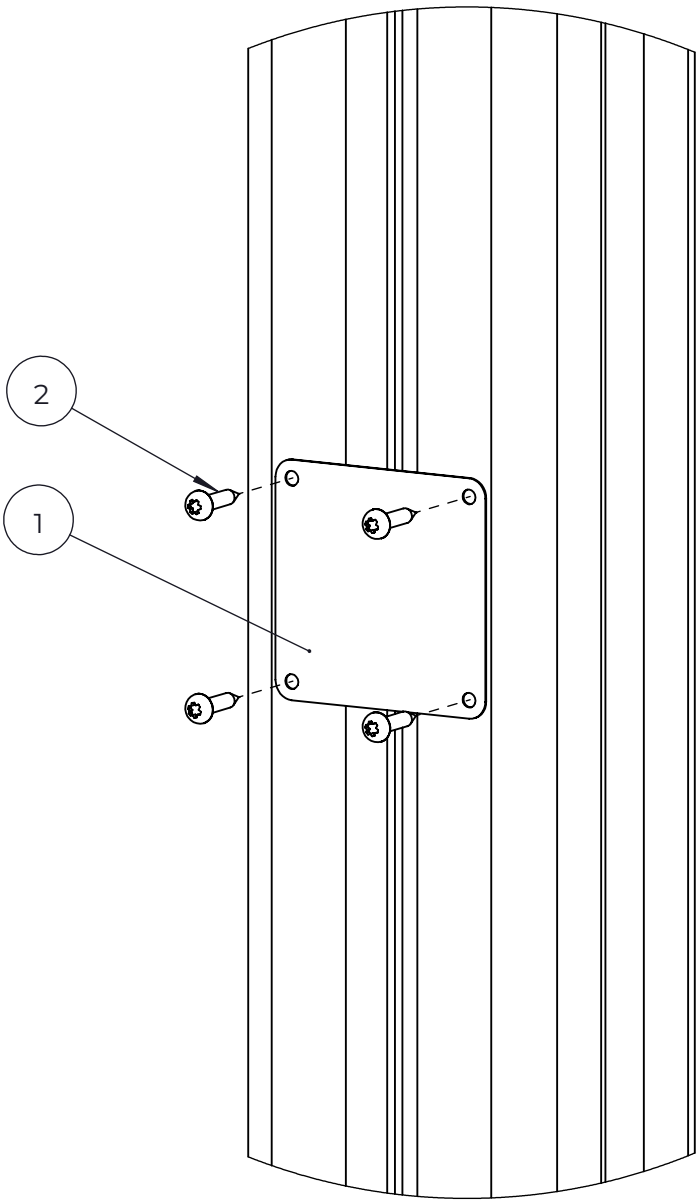

NO.	ITEM CODE			QTY.
1	702286	PRINTED LABEL	65x65	1
2	980114	SCREW	Ø4x20	4

Copyright Lappset Group Ltd

712798

Doc.Code: 297334
Rev.: 1.1

DATE: 26.9.2025

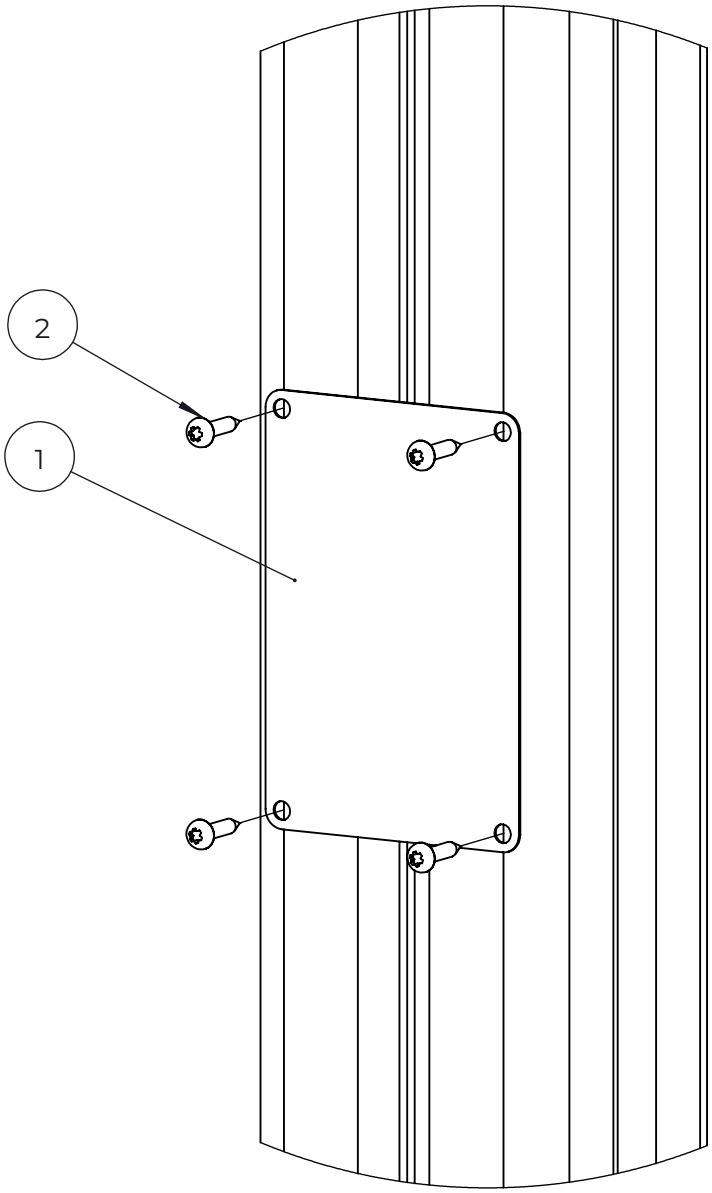

NO.	ITEM CODE			QTY.
1	702339	PRINTED LABEL	118x78	1
2	980114	SCREW	Ø4x20	4

Copyright Lappset Group Ltd

712889

Doc.Code: 296659
Rev.: 1

DATE: 2.7.2025

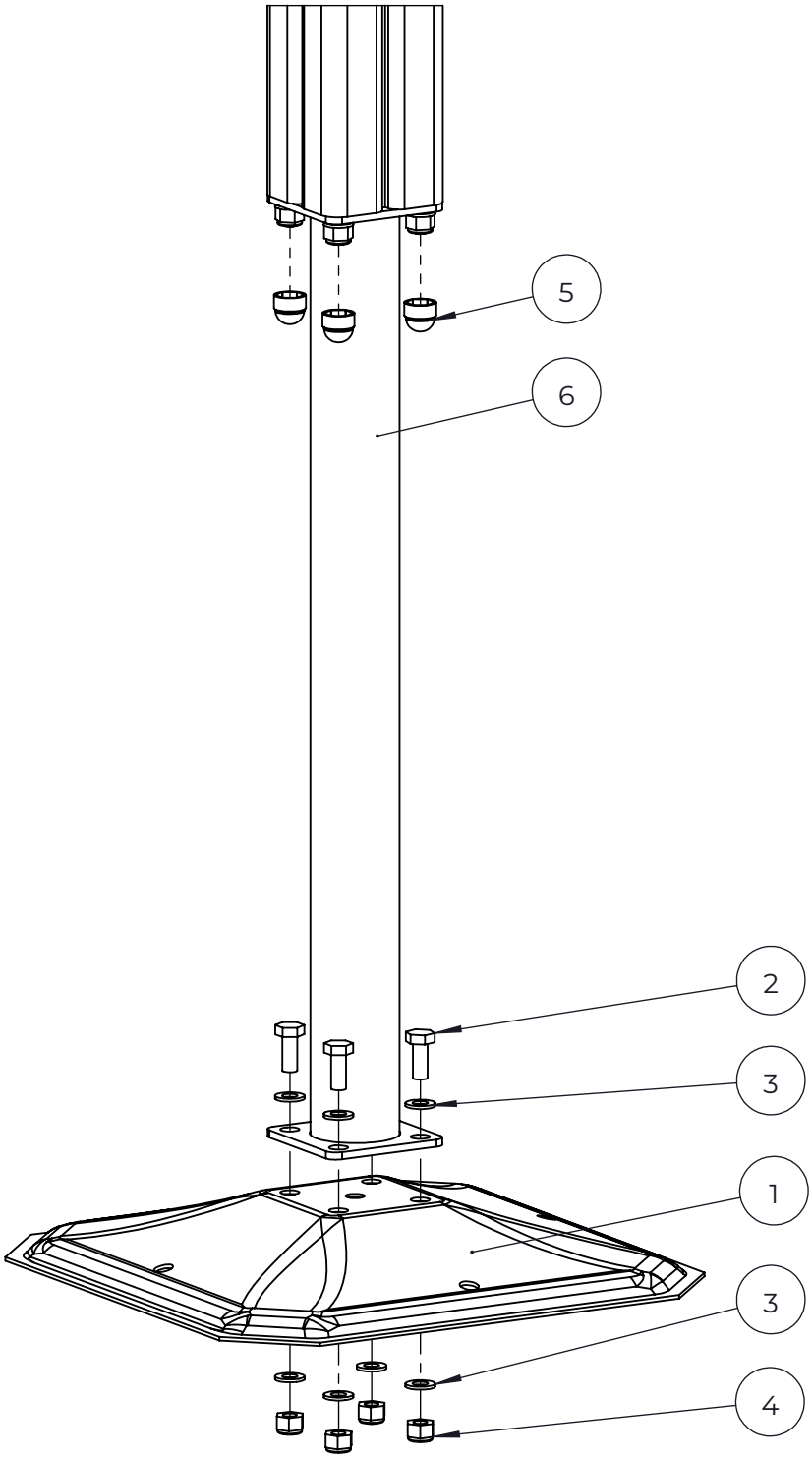

NO.	ITEM CODE			QTY.
1	909519	FOUNDATION PLATE	380 x 380 x 45	1
2	909639	BOLT	M10x25	4
3	909638	WASHER	Ø20 / 10.5	8
4	909637	NUT	M10	4
5	905104	OUTSIDE PLUG	M10	4
6	909511	FOUNDATION TUBE	90x90x650	1

Copyright Lappset Group Ltd

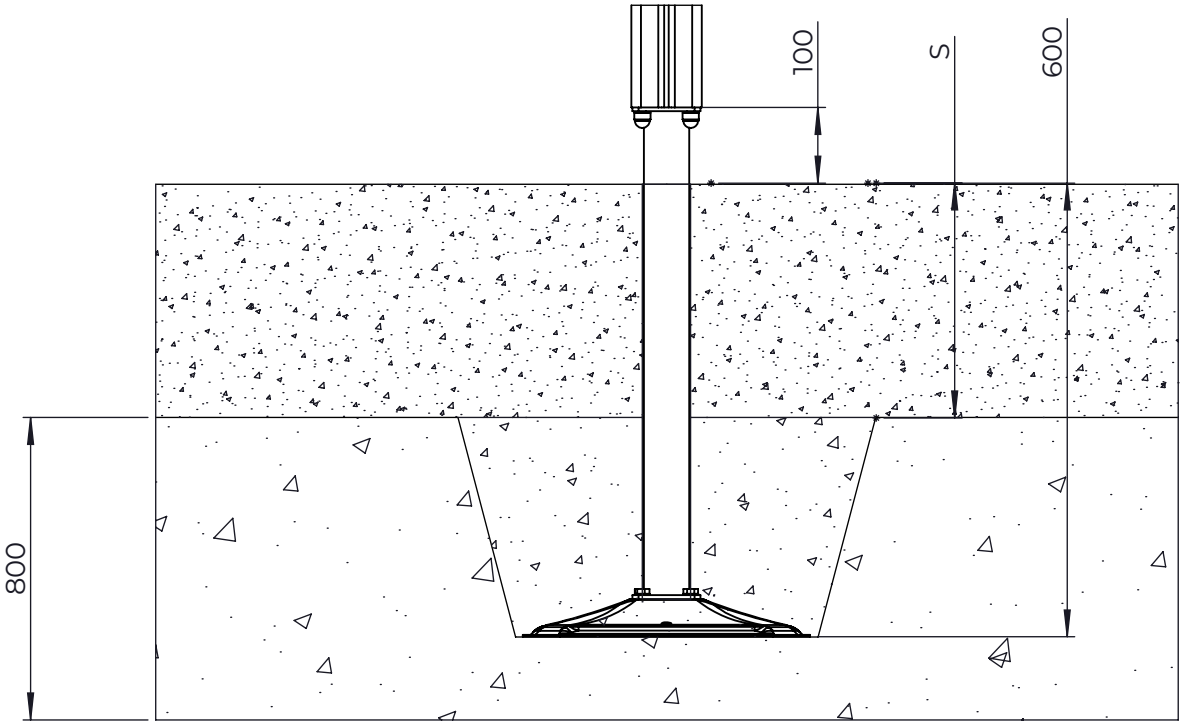

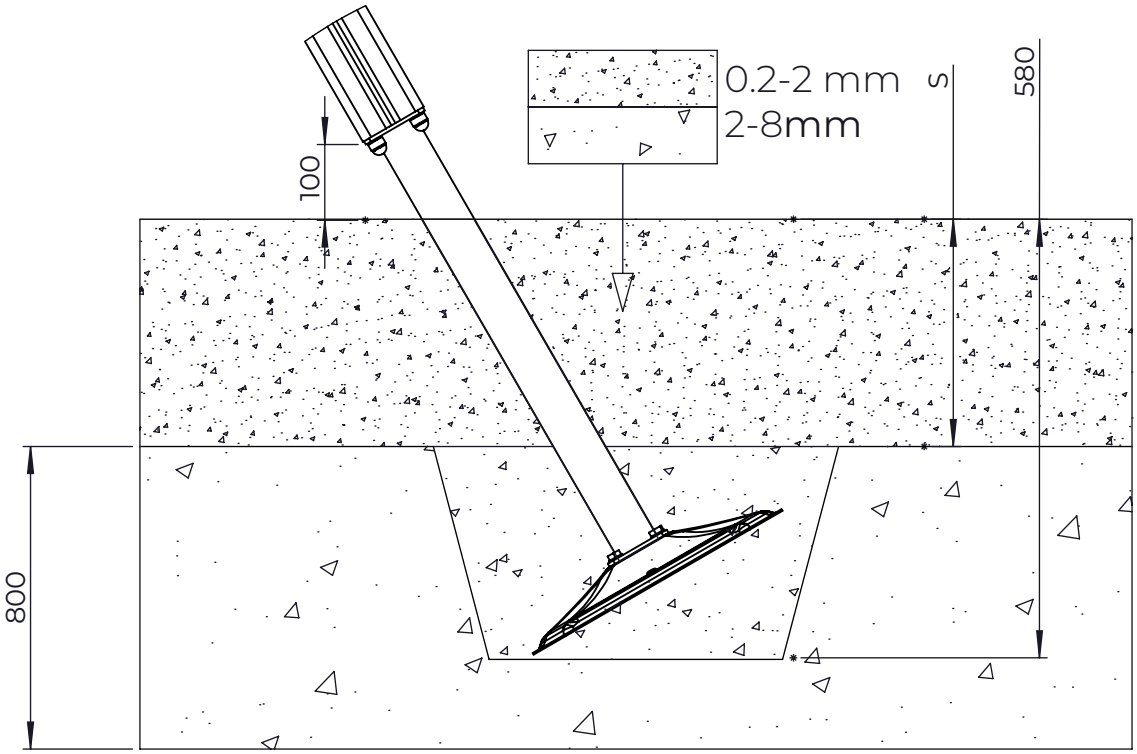

Copyright Lappset Group Ltd

701606

Doc.Code: 303277
Rev.: 1

DATE: 11.7.2025

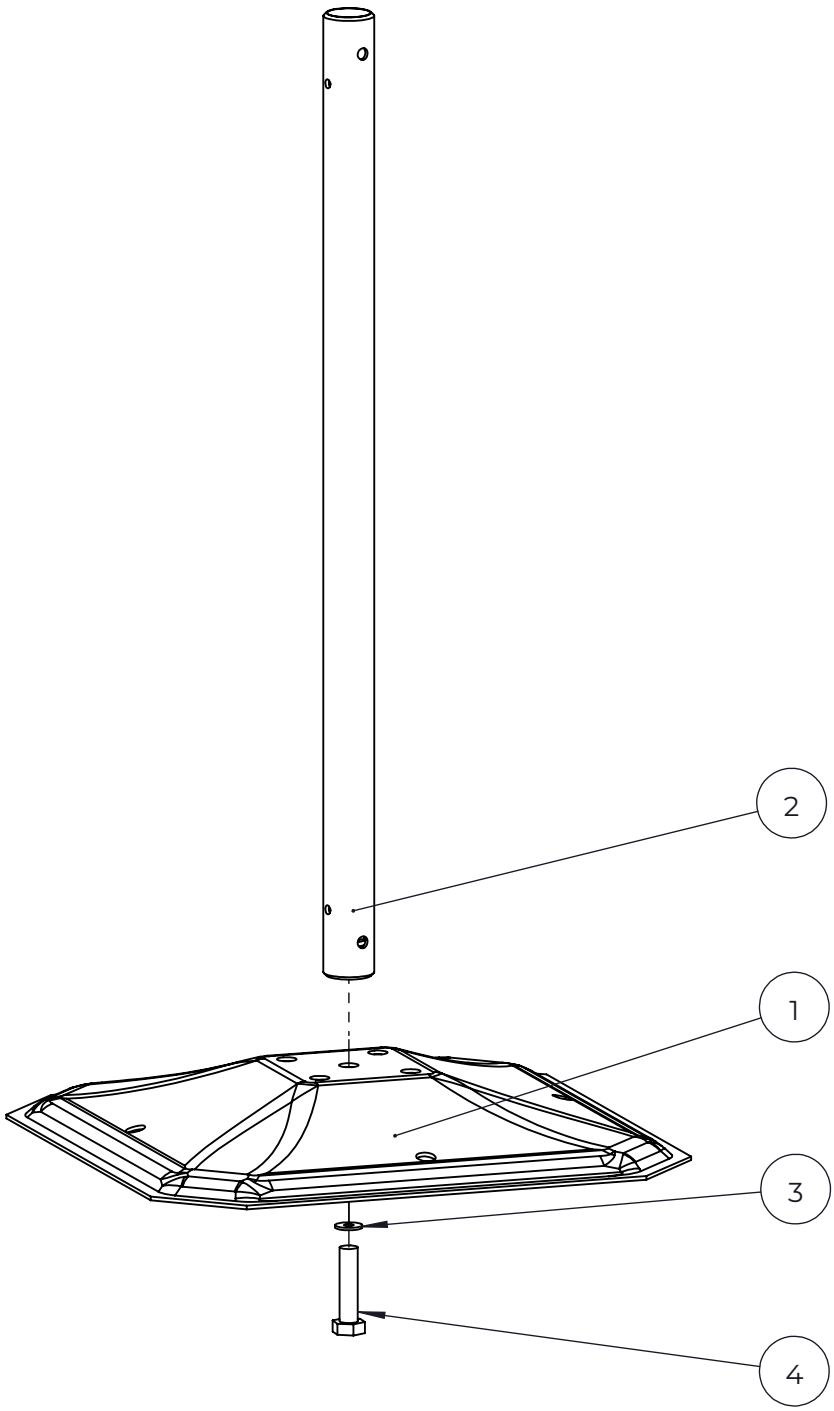

NO.	ITEM CODE			QTY.
1	909519	FOUNDATION PLATE	380 x 380 x 45	1
2	901916	FOUNDATION TUBE	Ø33.7x650	1
3	900350	WASHER	Ø18/6.4	1
4	909214	BOLT	M12x50	1

Copyright Lappset Group Ltd

701606

DATE: 11.7.2025

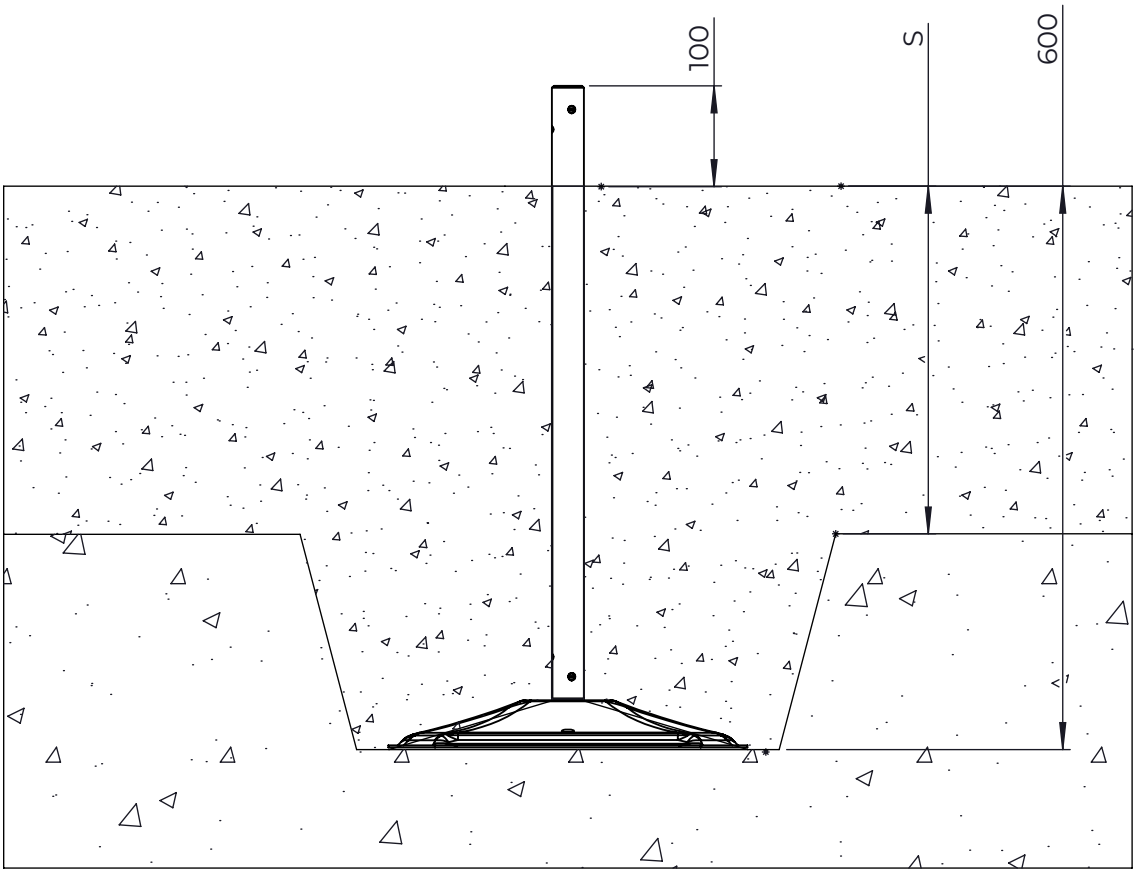

Copyright Lappset Group Ltd

712747

Doc.Code: 297354
Rev.: 1

DATE: 21.7.2025

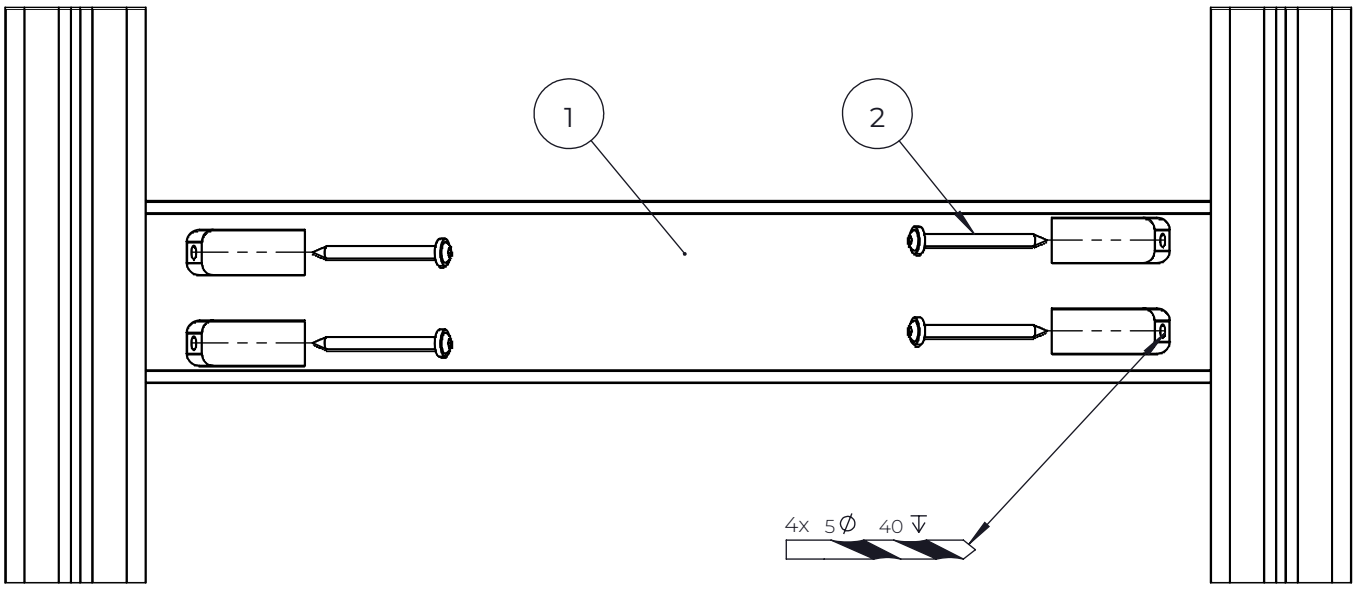

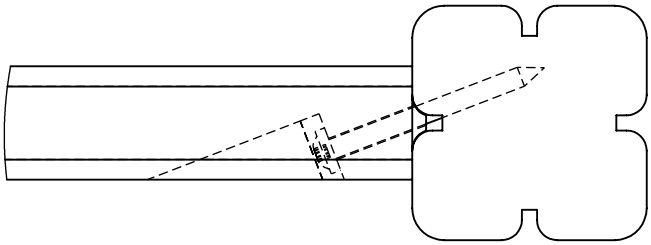

NO.	ITEM CODE			QTY.
1	712079	BOOM	45x120x715	1
2	903093	SPECIAL SCREW	Ø8x90	4

Copyright Lappset Group Ltd

712884

Doc.Code: 296758
Rev.: 1

DATE: 11.6.2025

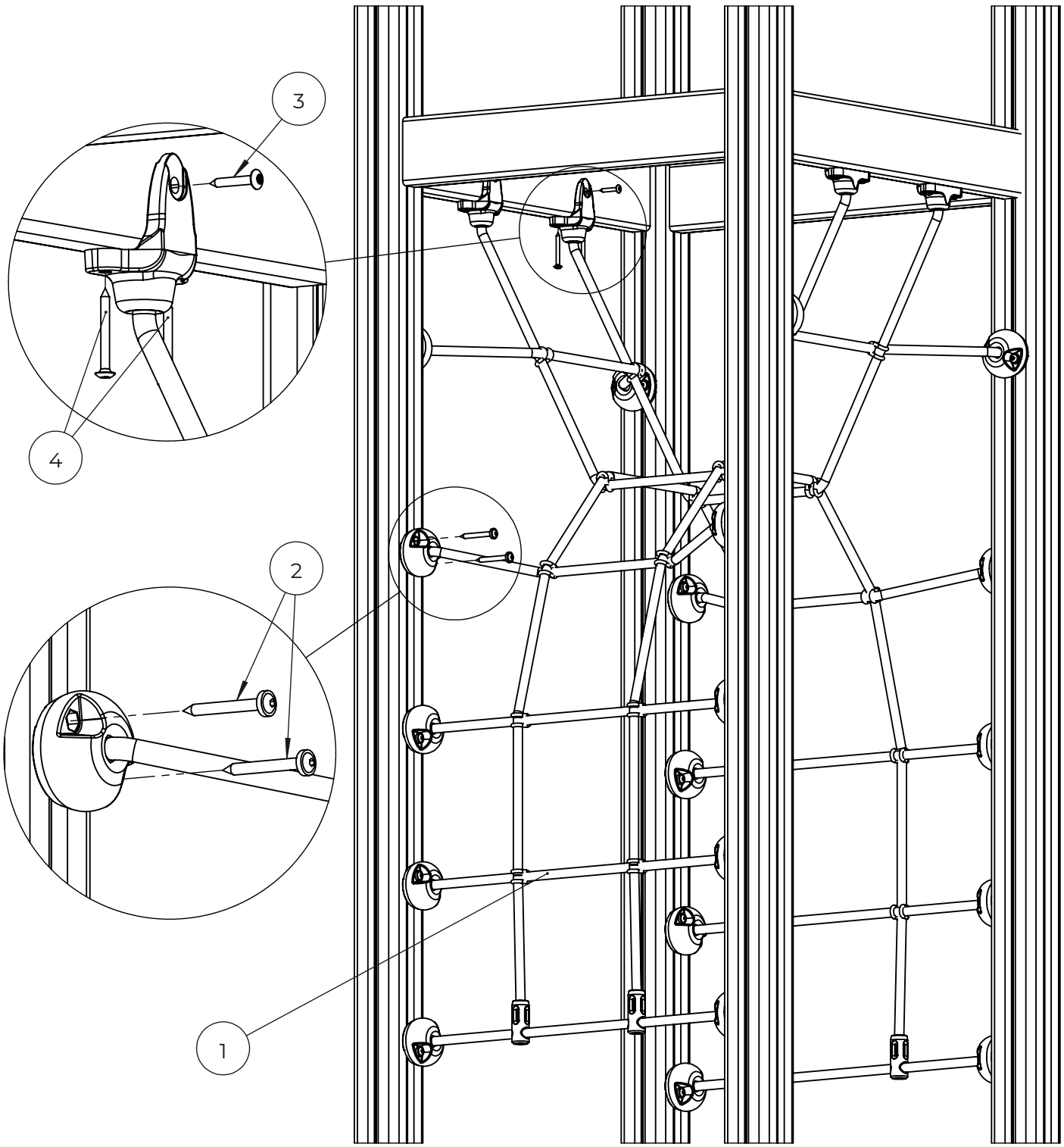

NO.	ITEM CODE			QTY.
1	707341-303	NET	1520x705	1
2	900240	SPECIAL SCREW	Ø8x70	40
3	980128	SPECIAL SCREW	Ø7x40	4
4	980123	SPECIAL SCREW	Ø7x60	8

Copyright Lappset Group Ltd

712884

Doc.Code: 296758
Rev.: 1

DATE: 11.6.2025

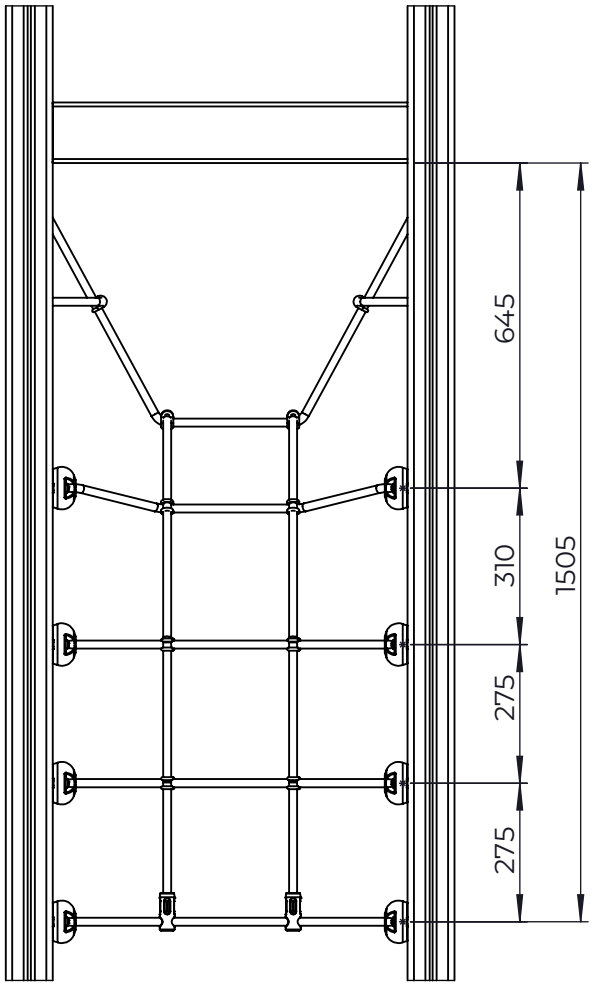

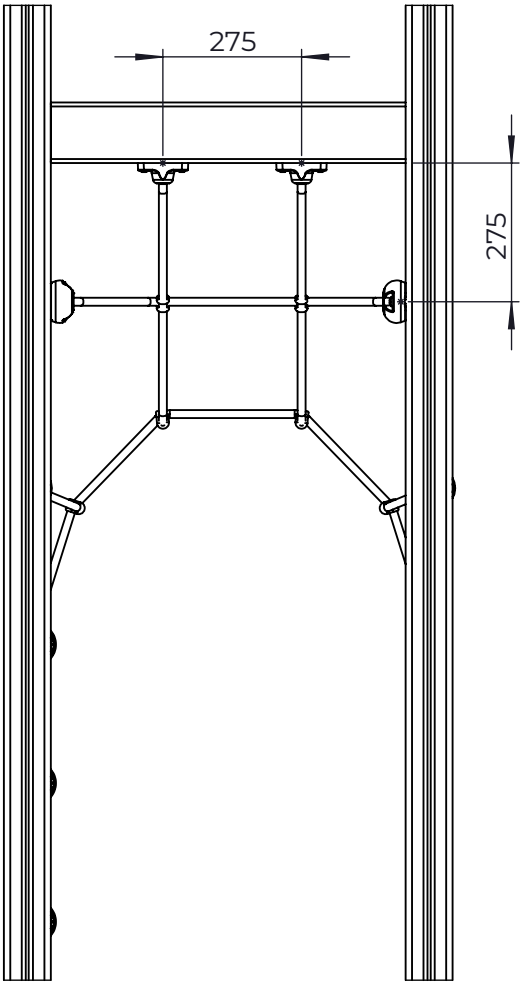

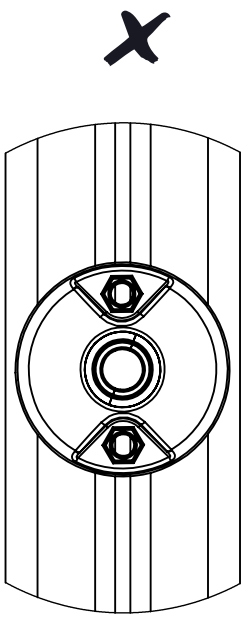

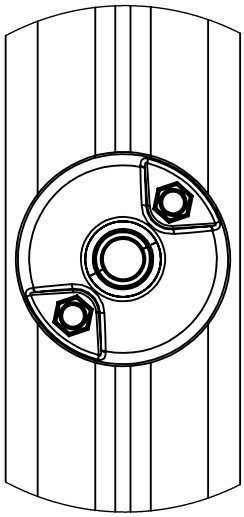

Copyright Lappset Group Ltd

712817

Doc.Code: 299801
Rev.: 1

DATE: 30.6.2025

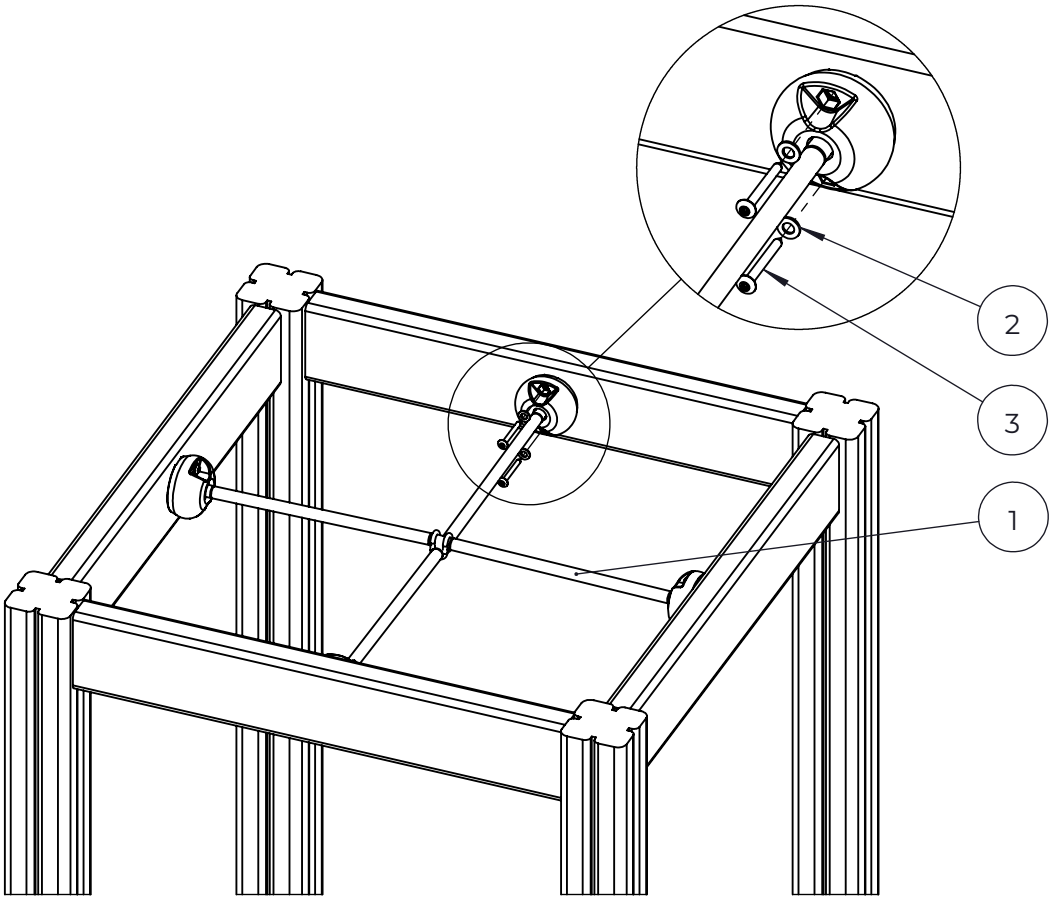

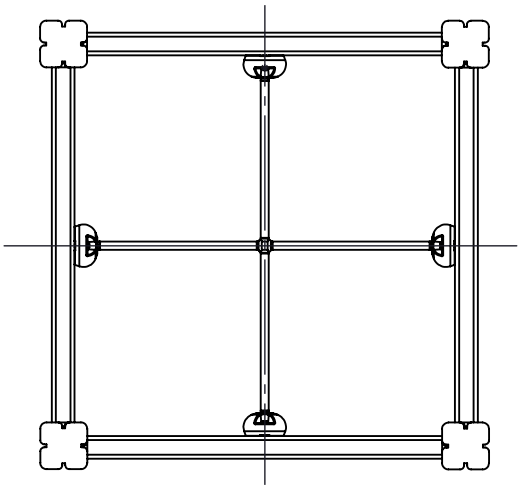

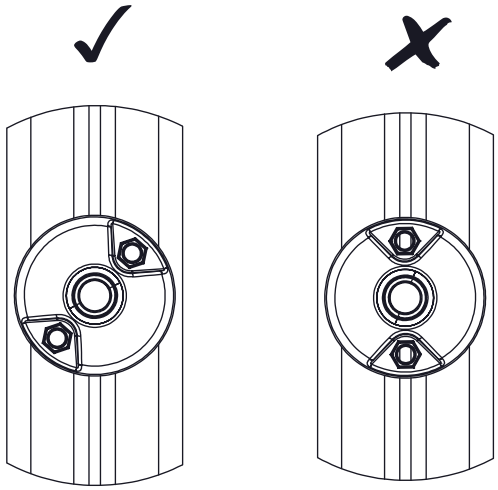

NO.	ITEM CODE			QTY.
1	706596	NET	755x755	1
2	909256	WASHER	Ø16/8.4x1.6	8
3	980123	SPECIAL SCREW	Ø7x60	8

Copyright Lappset Group Ltd

712517

Doc.Code: 296619
Rev.: 2.2

DATE: 12.11.2025

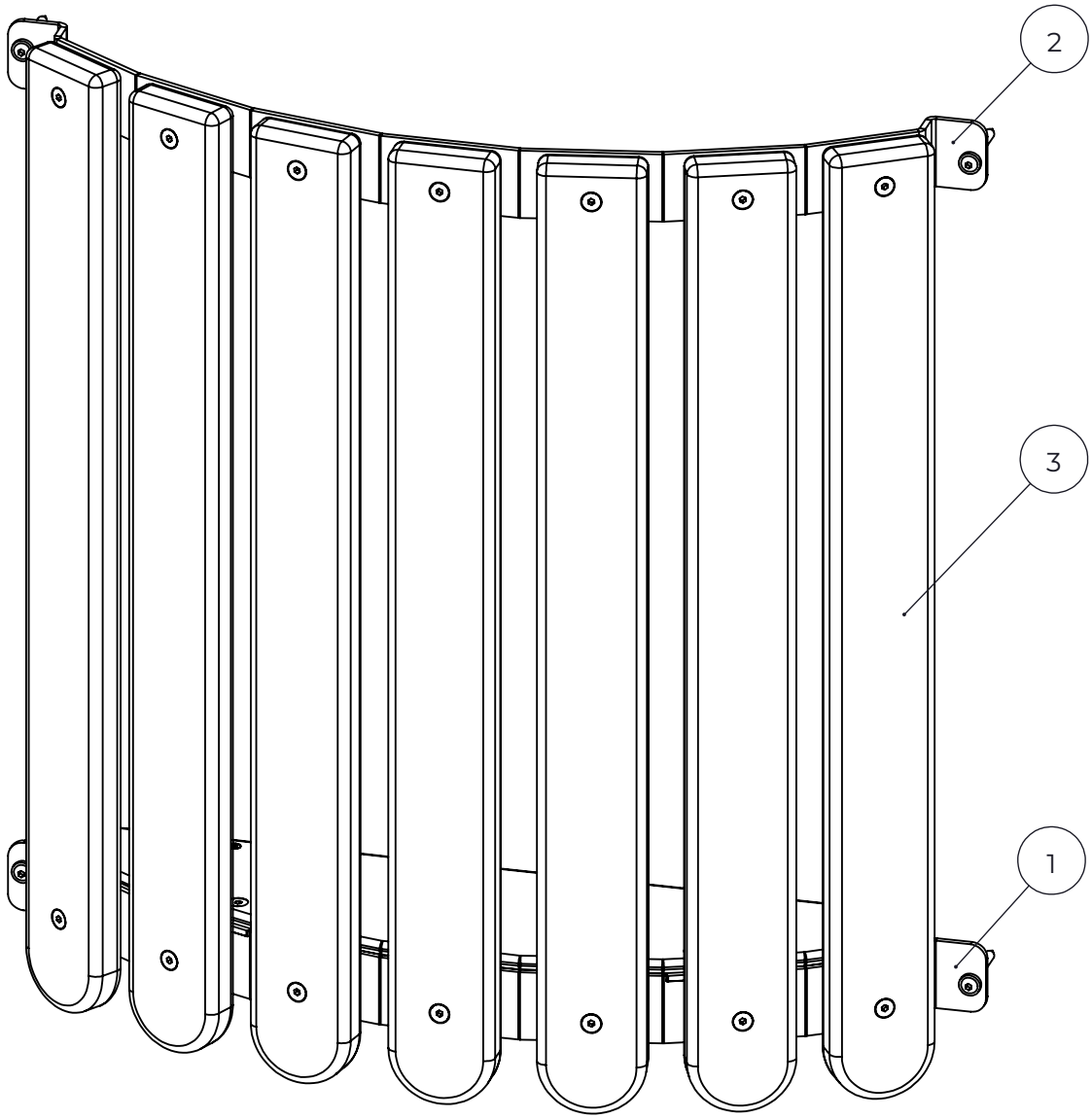

NO.	ITEM CODE			QTY.
1	914417	SUPPORT	60x155x826	1
2	914416	SUPPORT	60x155x826	1
3	710467	LATH	32x90x845	7
4	70644	STRIP	32x45x702	1
5	712053	FLOOR	12x176x732	1
6	909854	COUNTERSUNK SCREW	M8x50	14
7	900348	ALLEN SCREW	M8x30	2
8	909256	WASHER	Ø16/8.4x1.6	16
9	909633	NUT	M8	16
10	902270	SCREW	Ø5x50	2
11	900240	SPECIAL SCREW	Ø8x70	7

Copyright Lappset Group Ltd

712517

Doc.Code: 296619
Rev.: 2.2

DATE: 12.11.2025

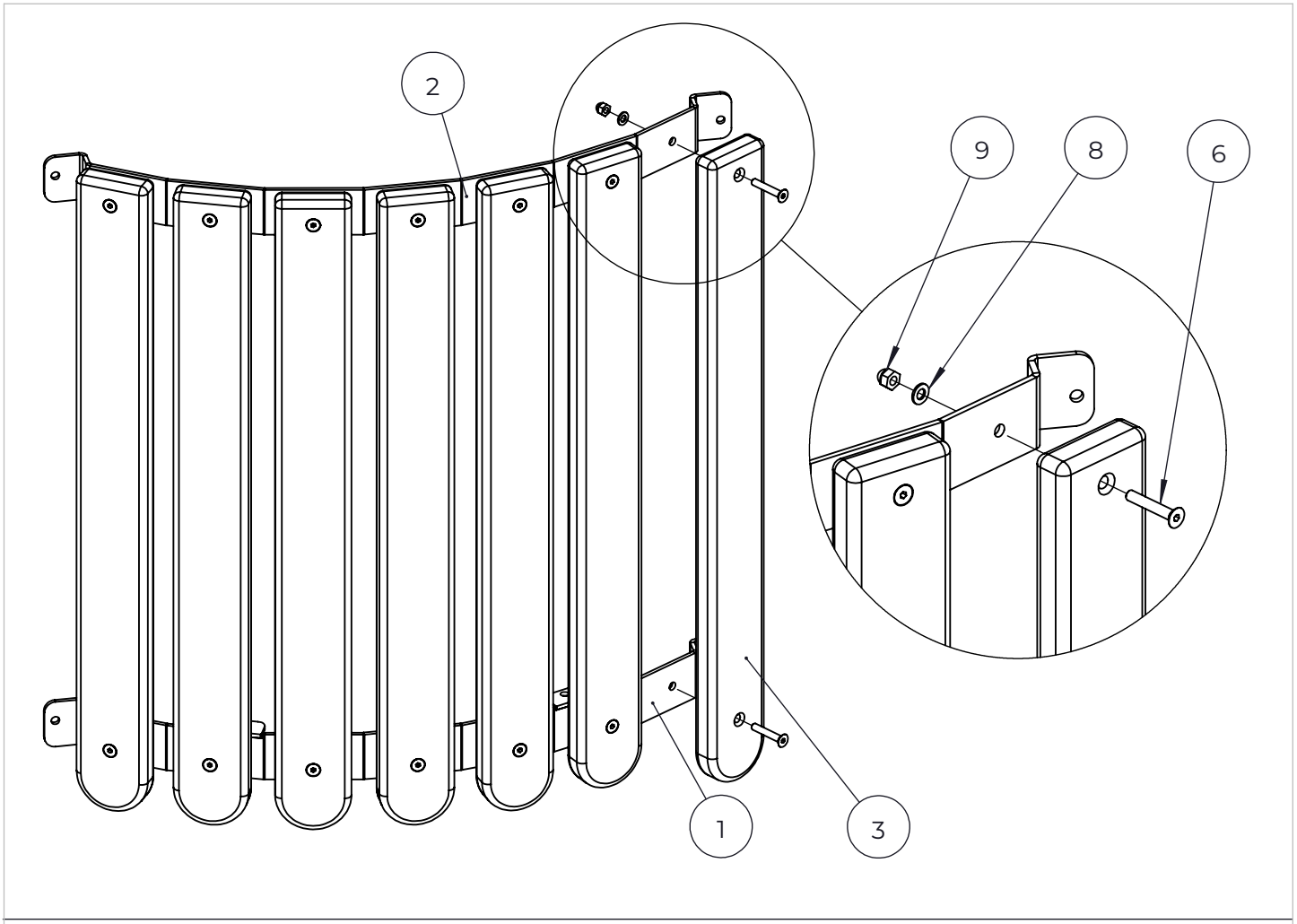

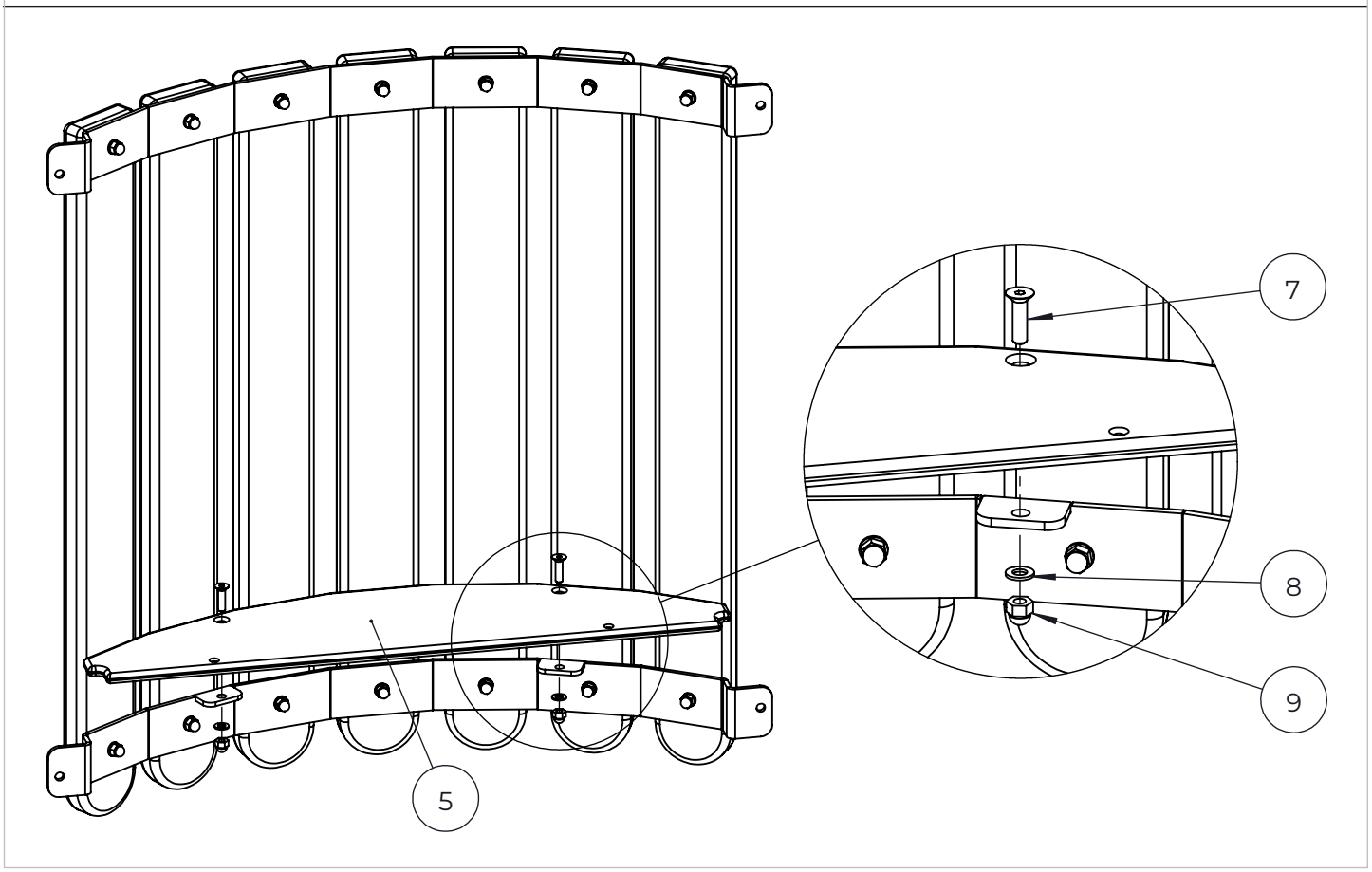

Copyright Lappset Group Ltd

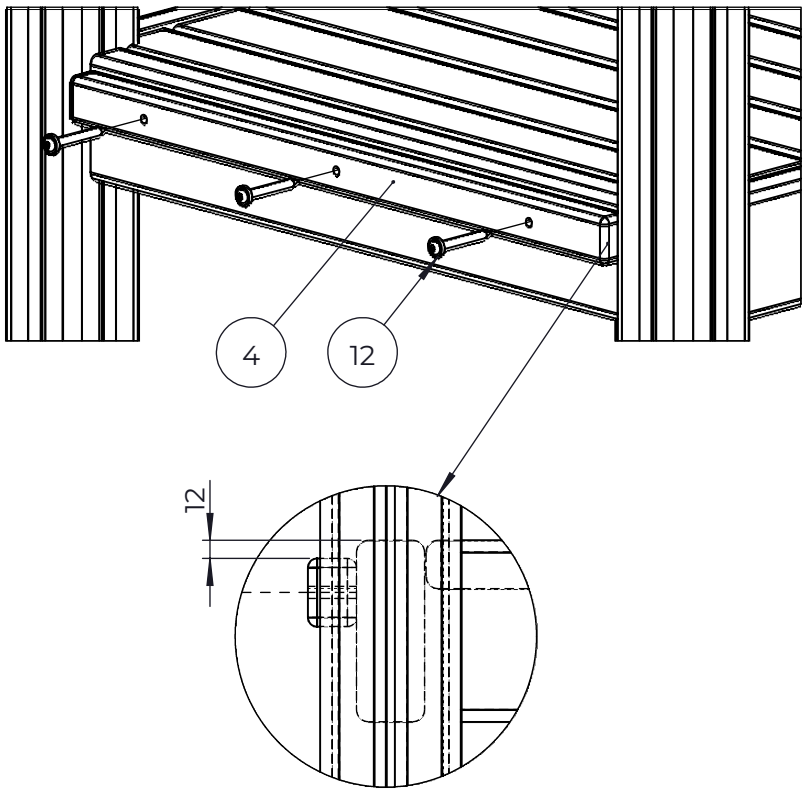

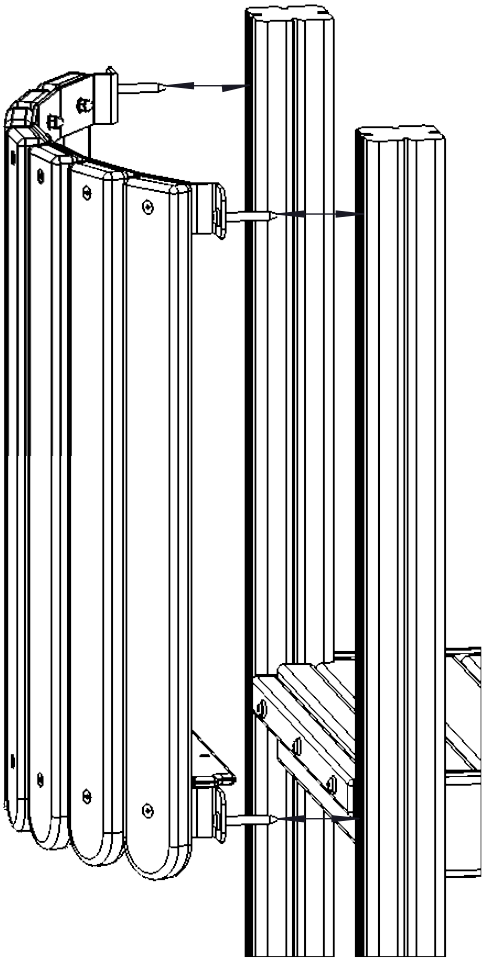

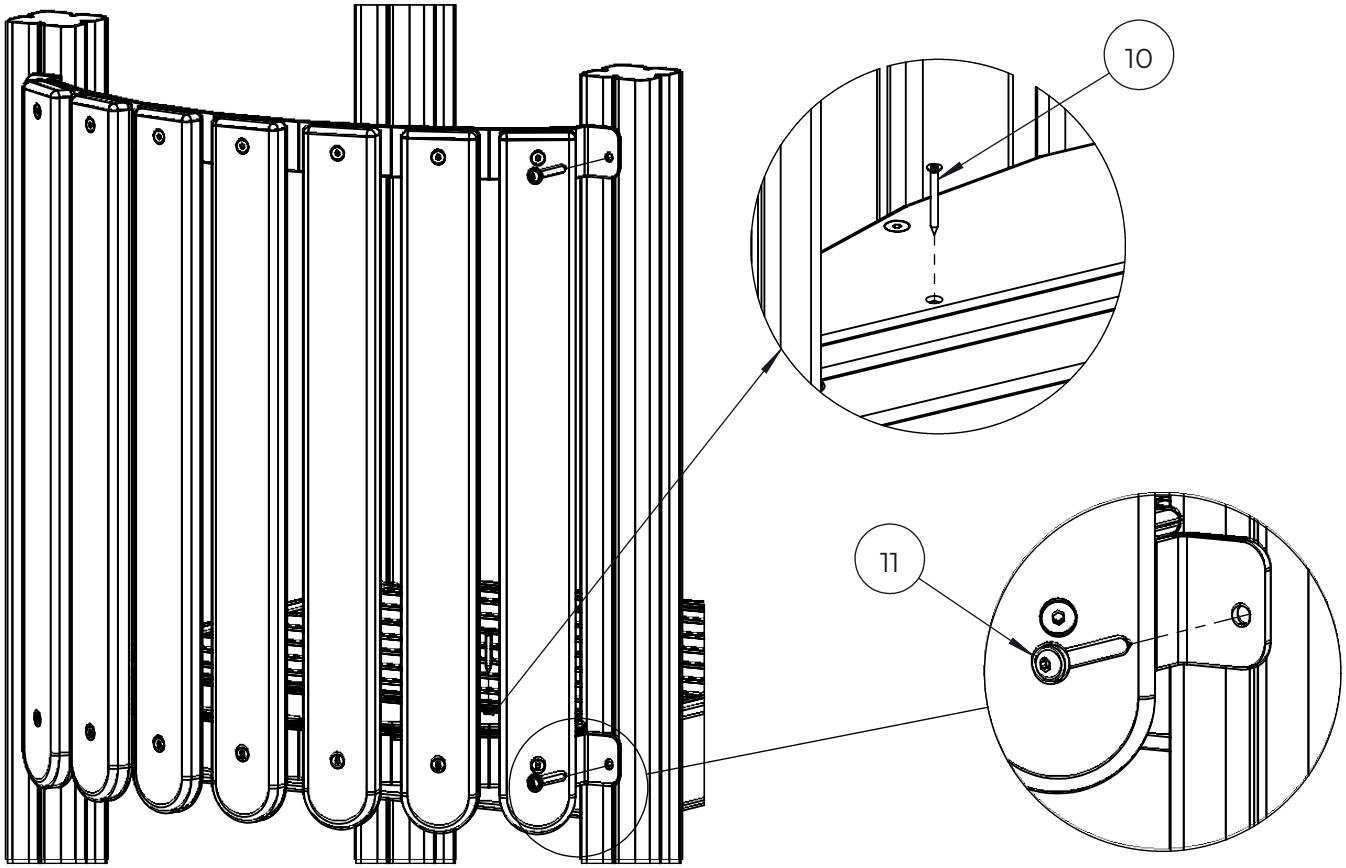

Copyright Lappset Group Ltd

712780

Doc.Code: 296034
Rev.: 1.1

DATE: 29.9.2025

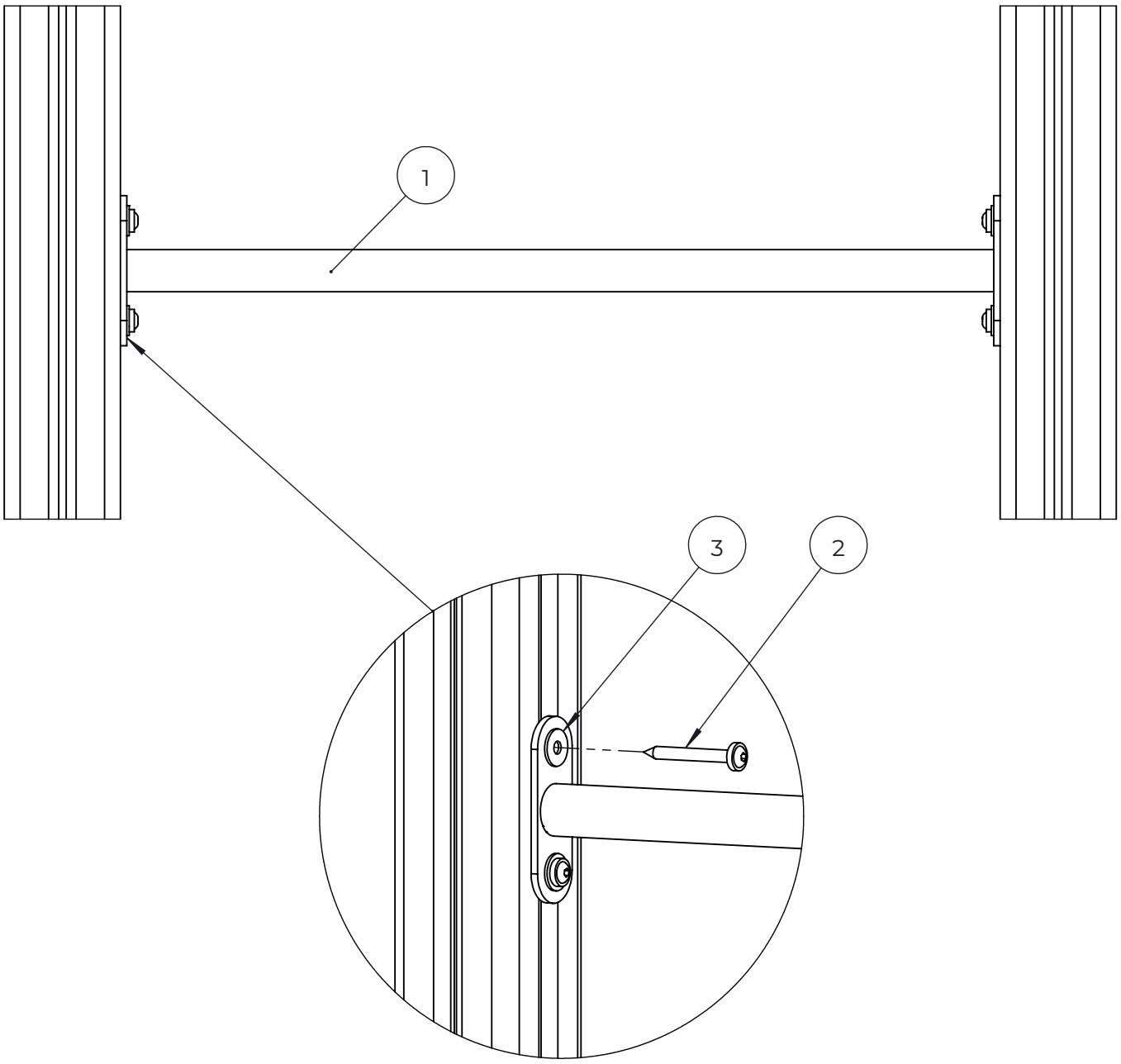

NO.	ITEM CODE			QTY.
1	914099	BAR ELEMENT	40x120x704	1
2	900240	SPECIAL SCREW	Ø8x70	4
3	980152	WASHER	Ø24/8.4x2	4

Copyright Lappset Group Ltd

712679

Doc.Code: 296711
Rev.: 1

DATE: 30.6.2025

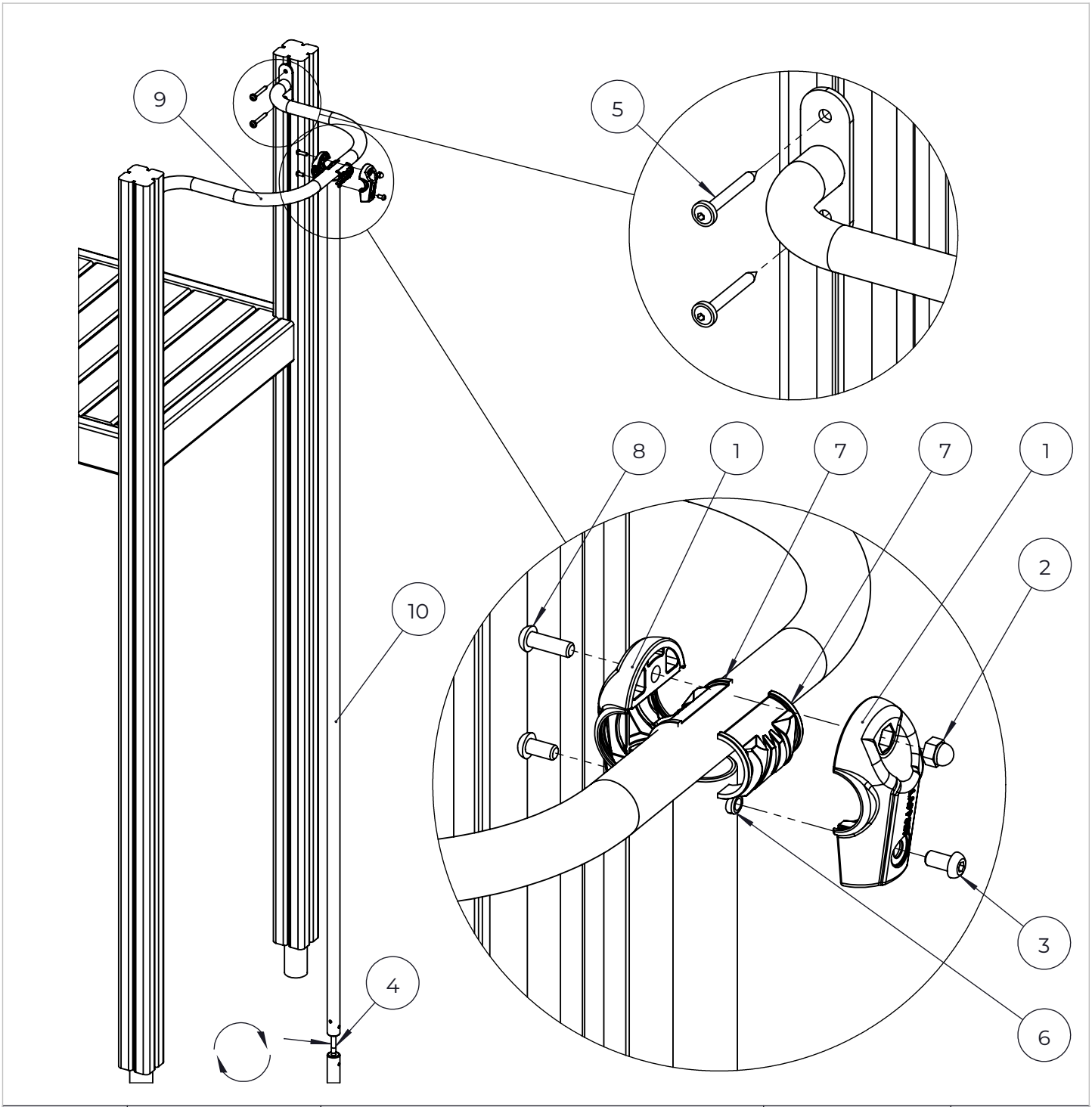

NO.	ITEM CODE			QTY.
1	901902	CLAMP	30.7x60.9x100	2
2	909633	NUT	M8	1
3	900342	ALLEN SCREW	M8x16	2
4	901939	STUDBOLT	DIN939	1
5	900240	SPECIAL SCREW	Ø8x70	4
6	901182	SPECIAL NUT	Ø11/M8x40	1
7	901900	FRICTION RUBBER	20.5x36.2x56	2
8	909850	ALLEN SCREW	M8x25	1
9	914891	BAR ELEMENT	120x387x702	1
10	907817	BAR ELEMENT	Ø33,7x2554	1

Copyright Lappset Group Ltd